7216 93RD AVE SE, LOT 1 MERCER ISLAND, WA 98040

GENERAL NOTES

1. ALL WORK SHALL CONFORM TO APPLICABLE CODES, INCLUDING BUT NOT LIMITED TO THE 2018 INTERNATIONAL BUILDING CODE, INTERNATIONAL RESIDENTIAL CODE, THE CURRENT WASHINGTON STATE ENERGY CODE, THE WASHINGTON STATE BUILDING CODE, CHAPTER 51-20 AND 51-21 WAC, THE 2015 UNIFORM PLUMBING CODE, AND ALL RULES, REGULATIONS AND ORDINANCES OF THE LOCAL GOVERNING AUTHORITY.
2. ENGINEERED DESIGN IN ACCORDANCE WITH THE IBC IS PERMITTED.
3. THE CONTRACTOR SHALL VERIFY ALL DIMENSIONS, AND SITE CONDITIONS, AND SHALL NOTIFY THE ARCHITECT IMMEDIATELY IN WRITING OF ANY DISCREPANCIES, ERRORS, OR OMISSIONS PRIOR TO PROCEEDING WITH THE WORK.
4. DO NOT SCALE THE DRAWINGS FOR CRITICAL DIMENSIONS. DIMENSIONS ARE SHOWN TO FACE OF STUDS, POSTS AND CONCRETE UNLESS INDICATED OTHERWISE.
5. CONTRACTOR SHALL PROVIDE ADEQUATE SHORING AND BRACING OF ALL STRUCTURAL MEMBERS DURING CONSTRUCTION.
6. THE CONTRACTOR SHALL VERIFY ALL DOOR AND WINDOW ROUGH-OPENING DIMENSIONS WITH THE DOOR AND WINDOW MANUFACTURERS.
7. PLUMBING, ELECTRICAL AND MECHANICAL CONTRACTORS SHALL VERIFY ALL REQUIREMENTS FOR THIS PROJECT AND COMPLY WITH ALL LOCAL CODES, SUBMIT PLANS FOR APPROVAL AND OBTAIN PERMIT BEFORE STARTING WORK.
8. TYPICAL DETAILS ARE SHOWN ONLY ONCE AND NOT REFERENCED AT ALL LOCATIONS; THE INTENT IS THAT THEY APPLY THROUGHOUT THE PROJECT UNLESS OTHERWISE NOTED.
9. ALL REQUIRED SHOP DRAWINGS AND SUBMITTALS SHALL BE REVIEWED BY THE ARCHITECT PRIOR TO PROCEEDING WITH THE WORK.
10. ALL SHOP DRAWING DIMENSIONS SHALL BE CHECKED AND VERIFIED IN THE FIELD BY THE CONTRACTOR.
11. CONTRACTOR SHALL BE RESPONSIBLE FOR THE REPAIR OF ANY DAMAGE CAUSED BY THEMSELVES OR OTHER TRADES.
12. INSPECTIONS ARE TO BE PER IRC SECTION R109.
13. ADDRESS MUST BE POSTED AND VISIBLE AT CONSTRUCTION SITE PER IRC SEC R319: BUILDINGS SHALL HAVE APPROVED ADDRESS NUMBERS, BUILDING NUMBERS OR APPROVED BUILDING IDENTIFICATION PLACED IN A POSITION THAT IS PLAINLY LEGIBLE AND VISIBLE FROM THE STREET OR ROAD FRONTING THE PROPERTY.

BUILDING THERMAL ENVELOPE

COMPLIANCE & CERTIFICATE POSTED

THE BUILDING THERMAL ENVELOPE SHALL MEET THE PRESCRIPTIVE REQUIREMENTS OF SECTION R402 OF THE WSEC PLUS THE INCREASED EFFICIENCIES OF OPTIONS SELECTED FROM TABLE R406.2. SEE TABLE ON THIS SHEET FOR CREDITS CHOSEN.

A PERMANENT CERTIFICATE SHALL BE POSTED WITHIN THREE FEET OF THE ELECTRICAL DISTRIBUTION PANEL BY THE BUILDER NOTING PREDOMINANT R-VALUES OF INSULATION INSTALLED IN OR ON CEILING/ROOF, WALLS, FOUNDATION (SLAB, BASEMENT WALL, CRAWLSPACE WALL AND/OR FLOOR), AND DUCTS OUTSIDE THE CONDITIONED SPACES; U-FACTORS FOR FENESTRATION; AND THE SOLARHEAT GAIN COEFFICIENT (SHGC) OF FENESTRATION. REFER TO SECTION R401.3 WSEC FOR ADDITIONAL INFORMATION.

INSULATION

REFER TO WSEC TABLE R402.1.1 ON THIS SHEET FOR INSULATION VALUES.

A. CEILINGS (ATTIC)
1. OPEN-BLOWN OR POURED LOOSE FILL INSULATION MAY BE USED IN ATTIC SPACES WHERE THE SLOPE OF THE CEILING IS NOT MORE THAN 3 IN 12 AND THERE IS AT LEAST 30 INCHES OF CLEAR DISTANCE FROM THE TOP OF THE BOTTOM CHORD OF THE TRUSS OR CEILING JOIST TO THE UNDERSIDE OF THE SHEATHING AT THE ROOF RIDGE.

B. CEILINGS (UNVENTED VAULT)
1. PROVIDE 3" CLOSED CELL SPRAY FOAM INSULATION @ BOTTOM SIDE OF SHEATHING WITH MIN. R-5.8 PER INCH. COMPLETELY FILL REMAINING JOIST CAVITY WITH BATT INSULATION. TOTAL INSULATION VALUE (SPRAY FOAM + BATT) TO BE R-38 MINIMUM.

C. WOOD FRAMED WALLS
1. ALL EXTERIOR WALL CAVITIES, INCLUDING CAVITIES ISOLATED DURING FRAMING, MUST BE FILLED WITH UNCOMPRESSED INSULATION.
2. RIGID BOARD INSULATION IS TO BE PLACED BEHIND ALL RECESSED FIXTURES IN EXTERIOR WALLS.
3. FACED BATTS ARE LAPPED AND ARE TO BE STAPLED TO FACE OF STUDS.
4. INSULATE BEHIND TUB/ SHOWER PARTITIONS AND CORNERS.

D. FLOORS
1. FLOOR INSULATION SHALL BE INSTALLED TO MAINTAIN PERMANENT CONTACT WITH THE UNDERSIDE OF THE SUBFLOOR DECKING.
2. INSULATION SUPPORTS SHALL BE INSTALLED SO SPACING IS NO MORE THAN 24-INCHES ON CENTER.
3. FOUNDATION VENTS SHALL BE PLACED SO THAT THE TOP OF THE VENT IS BELOW THE LOWER SURFACE OF THE FLOOR INSULATION.

E. SLAB-ON-GRADE
1. RIGID INSULATION UNDER CONCRETE SLAB IN HEATED SPACES. THE INSULATION SHALL EXTEND DOWNWARD FROM THE TOP OF THE SLAB FOR A MINIMUM OF 2'-0" OR TO THE TOP OF THE FOOTING, WHICHEVER IS LESS, AND HORIZONTALLY UNDER THE ENTIRE SLAB IN ACCORDANCE WITH OPTION 1a.

F. 4X HEADERS = R-10

G. DUCTS = DUCTS SHALL BE INSULATED TO A MINIMUM OF R-8.
EXCEPTION: DUCTS OR PORTIONS THEREOF LOCATED COMPLETELY INSIDE THE BUILDING THERMAL ENVELOPE.

H. PIPING = MECHANICAL SYSTEM PIPING CAPABLE OF CARRYING FLUIDS ABOVE 105°F OR BELOW 55°F SHALL BE INSULATED TO A MINIMUM OF R-6.
1. PIPING INSULATION EXPOSED TO WEATHER SHALL BE PROTECTED FROM DAMAGE, INCLUDING THAT CAUSED BY SUNLIGHT, MOISTURE, EQUIPMENT MAINTENANCE, AND WIND, AND SHALL PROVIDE SHIELDING FROM SOLAR RADIATION THAT CAN CAUSE DEGRADATION OF THE MATERIAL. ADHESIVE TAPE SHALL NOT BE PERMITTED.

INSULATION FOR HOT WATER PIPE SHALL HAVE A MIN. THERMAL RESISTANCE (R-VALUE) OF R-4.

H. ELECTRIC WATER HEATERS = ALL ELECTRIC WATER HEATERS IN UNHEATED SPACES OR ON CONCRETE FLOORS SHALL BE PLACED ON AN INCOMPRESSIBLE, INSULATED SURFACE WITH A MINIMUM THERMAL RESISTANCE OF R-10.

MOISTURE CONTROL

VAPOR RETARDERS

SLABS:	6 MIL POLYETHYLENE SHEETS
FLOORS:	3/4" CDX PLYWOOD OR 3/4" O.S.B.
WALLS:	KRAFT FACED FIBERGLASS BATTS
CEILING:	PVA PAINT (EXCEPT AT UNVENTED ROOF ASSEMBLIES)

1. ATTIC ACCESS AND DOORS ARE TO BE BAFFLED, WEATHER-STRIPPED AND INSULATED.
2. EXTERIOR DOORS AND WINDOWS ARE TO BE CAULKED AND WEATHER-STRIPPED.
3. RECESSED LIGHT FIXTURES TO LIMIT AIR LEAKAGE PER WSEC 402.4.4.
4. ALL PLUMBING, ELECTRICAL AND HVAC PENETRATIONS IN FLOORS, WALLS AND CEILING ARE TO BE CAULKED AND SEALED.
5. ELECTRICAL OUTLET AND LIGHT SWITCH BOXES ON EXTERIOR WALLS MUST BE SEALED AT THE BACK OF THE RECEPTACLE WITH A FACE PLATE GASKET.
6. SILL PLATE TO BE CAULKED OR GLUED TO SUB-FLOOR.
7. CAULK/SEAL RIM JOISTS BETWEEN STORIES.
8. FIRE-STOP ALL PENETRATIONS AS REQUIRED BY THE CODE & BUILDING DEPARTMENT.

FENESTRATION

AN AREA-WEIGHTED AVERAGE OF FENESTRATION PRODUCTS SHALL BE PERMITTED TO SATISFY THE U-FACTOR REQUIREMENTS.

UP TO 15 SQUARE FEET OF GLAZED FENESTRATION PER DWELLING UNIT SHALL BE PERMITTED TO BE EXEMPT FROM U-FACTOR.

ONE SIDE-HINGED OPAQUE DOOR ASSEMBLY UP TO 24 SQUARE FEET IN AREA IS EXEMPTED FROM THE U-FACTOR REQUIREMENT.

AIR LEAKAGE AND TESTING

THE COMPONENTS OF THE BUILDING THERMAL ENVELOPE AS LISTED IN TABLE R402.4.1.1 SHALL BE INSTALLED IN ACCORDANCE WITH THE MANUFACTURER'S INSTRUCTIONS AND THE CRITERIA LISTED IN TABLE R402.4.1.1, AS APPLICABLE TO THE 2012 WASHINGTON STATE ENERGY CODE RE-23 METHOD OF CONSTRUCTION. WHERE REQUIRED BY THE CODE OFFICIAL, AN APPROVED THIRD PARTY SHALL INSPECT ALL COMPONENTS AND VERIFY COMPLIANCE.

THE BUILDING OR DWELLING UNIT SHALL BE TESTED AND VERIFIED AS HAVING AN AIR LEAKAGE RATE OF NOT EXCEEDING 5 AIR CHANGES PER HOUR. TESTING SHALL BE CONDUCTED WITH A BLOWER DOOR AT A PRESSURE OF 0.2 INCHES W.G. (50 PASCALS). WHERE REQUIRED BY THE CODE OFFICIAL, TESTING SHALL BE CONDUCTED BY AN APPROVED THIRD PARTY. A WRITTEN REPORT OF THE RESULTS OF THE TEST SHALL BE SIGNED BY THE PARTY CONDUCTING THE TEST AND PROVIDED TO THE CODE OFFICIAL. TESTING SHALL BE PERFORMED AT ANY TIME AFTER CREATION OF ALL PENETRATIONS OF THE BUILDING THERMAL ENVELOPE.

WINDOWS, SKYLIGHTS AND SLIDING GLASS DOORS SHALL HAVE AN AIR INFILTRATION RATE OF NO MORE THAN 0.3 CFM PER SQUARE FOOT, AND SWINGING DOORS NO MORE THAN 0.5 CFM PER SQUARE FOOT, WHEN TESTED ACCORDING TO NFRC 400 OR AAMA/WDMA/CSA 101/I.S.2/A440 BY AN ACCREDITED, INDEPENDENT LABORATORY AND LISTED AND LABELED BY THE MANUFACTURER.

EXCEPTIONS:
1. FIELD-FABRICATED FENESTRATION PRODUCTS (WINDOWS, SKYLIGHTS AND DOORS).
2. CUSTOM EXTERIOR FENESTRATION PRODUCTS MANUFACTURED BY A SMALL BUSINESS PROVIDED THEY MEET THE APPLICABLE PROVISIONS OF CHAPTER 24 OF THE INTERNATIONAL BUILDING CODE.
3. CUSTOM EXTERIOR WINDOWS AND DOORS MANUFACTURED BY A SMALL BUSINESS PROVIDED THEY MEET THE APPLICABLE PROVISIONS OF CHAPTER 24 OF THE INTERNATIONAL BUILDING CODE. ONCE VISUAL INSPECTION HAS CONFIRMED THE PRESENCE OF A GASKET, OPERABLE WINDOWS AND DOORS MANUFACTURED BY SMALL BUSINESS SHALL BE PERMITTED TO BE SEALED OFF AT THE FRAME PRIOR TO THE TEST.

RECESSED LUMINAIRES INSTALLED IN THE BUILDING THERMAL ENVELOPE SHALL BE TYPE IC-RATED AND CERTIFIED UNDER ASTM E283 AS HAVING AN AIR LEAKAGE RATE NOT MORE THAN 2.0 CFM WHEN TESTED AT A 1.57 PSF PRESSURE DIFFERENTIAL AND SHALL HAVE A LABEL ATTACHED SHOWING COMPLIANCE WITH THIS TEST METHOD. ALL RECESSED LUMINAIRES SHALL BE SEALED WITH A GASKET OR CAULK BETWEEN THE HOUSING AND THE INTERIOR WALL OR CEILING COVERING.

ADDITIONAL ENERGY EFFICIENCY REQUIREMENTS

EACH DWELLING UNIT IN ONE- AND TWO-FAMILY DWELLINGS AND TOWNHOUSES SHALL COMPLY WITH SUFFICIENT OPTIONS FROM TABLE R406.2 SO AS TO ACHIEVE THE REQUIRED MINIMUM NUMBER OF CREDITS. SEE TABLE ON THIS SHEET FOR CREDITS CHOSEN.

BUILDING SYSTEMS

CONTROLS

AT LEAST ONE THERMOSTAT SHALL BE PROVIDED FOR EACH SEPARATE HEATING AND COOLING SYSTEM.

WHERE THE PRIMARY HEATING SYSTEM IS A FORCED-AIR FURNACE, AT LEAST ONE THERMOSTAT PER DWELLING UNIT SHALL BE CAPABLE OF CONTROLLING THE HEATING AND COOLING SYSTEM ON A DAILY SCHEDULE TO MAINTAIN DIFFERENT TEMPERATURE SET POINTS AT DIFFERENT TIMES OF THE DAY. SEE WSEC R403.1 FOR ADDITIONAL REQUIREMENTS.

DUCTS & AIR DUCT SEALING

DUCTS, AIR HANDLERS, AND FILTER BOXES SHALL BE SEALED. JOINTS AND SEAMS SHALL COMPLY WITH EITHER THE INTERNATIONAL MECHANICAL CODE OR INTERNATIONAL RESIDENTIAL CODE, AS APPLICABLE.

DUCTS SHALL BE LEAK TESTED IN ACCORDANCE WITH WSU RS-33, USING THE MAXIMUM DUCT LEAKAGE RATES SPECIFIED. DUCT TIGHTNESS SHALL BE VERIFIED BY EITHER OF THE FOLLOWING:
1. POSTCONSTRUCTION TEST: TOTAL LEAKAGE SHALL BE LESS THAN OR EQUAL TO 4 CFM PER 100 SQUARE FEET OF CONDITIONED FLOOR AREA WHEN TESTED AT A PRESSURE DIFFERENTIAL OF 0.1 INCHES W.G. ACROSS THE ENTIRE SYSTEM, INCLUDING THE MANUFACTURER'S AIR HANDLER ENCLOSURE. ALL REGISTER BOOTS SHALL BE TAPED OR OTHERWISE SEALED DURING THE TEST. LEAKAGE TO OUTDOORS SHALL BE LESS THAN OR EQUAL TO 4 CFM PER 100 SQUARE FEET OF CONDITIONED FLOOR AREA.
2. ROUGH-IN TEST: TOTAL LEAKAGE SHALL BE LESS THAN OR EQUAL TO 4 CFM PER 100 SQUARE FEET OF CONDITIONED FLOOR AREA WHEN TESTED AT A PRESSURE DIFFERENTIAL OF 0.1 INCHES W.G. ACROSS THE SYSTEM, INCLUDING THE MANUFACTURER'S AIR HANDLER ENCLOSURE. ALL REGISTERS SHALL BE TAPED OR OTHERWISE SEALED DURING THE TEST. IF THE AIR HANDLER IS NOT INSTALLED AT THE TIME OF THE TEST, TOTAL LEAKAGE SHALL BE LESS THAN OR EQUAL TO 3 CFM PER 100 SQUARE FEET OF CONDITIONED FLOOR AREA.

AIR HANDLERS SHALL HAVE A MANUFACTURER'S DESIGNATION FOR AN AIR LEAKAGE OF NO MORE THAN 2 PERCENT OF THE DESIGN AIR FLOW RATE WHEN TESTED IN ACCORDANCE WITH ASHRAE 193.

BUILDING FRAMING CAVITIES SHALL NOT BE USED AS DUCTS OR PLENUMS. INSTALLATION OF DUCTS IN EXTERIOR WALLS, FLOORS OR CEILINGS SHALL NOT DISPLACE REQUIRED ENVELOPE INSULATION.

LIGHTING EQUIPMENT

A MINIMUM OF 75 PERCENT OF PERMANENTLY INSTALLED LAMPS IN LIGHTING FIXTURES SHALL BE HIGH-EFFICACY LAMPS W/ COLOR TEMPERATURE = 2700K, 90+CRI LED LUMINARIES.

EQUIPMENT SIZING

HEATING AND COOLING EQUIPMENT SHALL BE SIZED IN ACCORDANCE WITH ACCA MANUAL S BASED ON BUILDING LOADS CALCULATED IN ACCORDANCE WITH ACCA MANUAL J OR OTHER APPROVED HEATING AND COOLING CALCULATION METHODOLOGIES.

MECHANICAL AND PLUMBING

1. WATER HEATERS SHALL BE INSTALLED IN ACCORDANCE WITH MANUFACTURERS INSTRUCTIONS. WATER HEATERS INSTALLED IN ATTICS SHALL COMPLY WITH M1305.1.3. GAS FIRED WATER HEATERS SHALL COMPLY WITH IRC CHAPTER 24. ELECTRIC WATER HEATERS SHALL COMPLY WITH UL 174 AND INSTALLED IN ACCORDANCE WITH IRC CHAPTERS 34 THROUGH 43.
2. WATER HEATER STORAGE TANK TO BE LABELED TO MEET THE 1987 NATIONAL APPLIANCE ENERGY CONSERVATION ACT.
3. STEEL W.H. TO COMPLY WITH ASHRAE 90A-80.
4. EQUIP WATER HEATERS WITH A PRESSURE RELIEF LINE PLUMBED TO OUTSIDE.
5. PROVIDE 26 GA METAL SEISMIC STRAPS AROUND WATER HEATER TO WALL TO RESIST LATERAL FORCES. PLACE STRAPS IN UPPER 1/3 AND LOWER 1/3 OF ITS VERTICAL DIMENSION IN ACCORDANCE WITH UPC SECTION 507.2.
6. H.V.A.C. UNIT TO COMPLY WITH THE W.S.E.C. & LABELED WITH A PERFORMANCE RATING.

AUTOMATIC FIRE SPRINKLER SYSTEMS

FIRE SPRINKLERS ARE REQUIRED FOR THIS PROJECT PER NFPA 13D.

WHOLE HOUSE VENTILATION

WAC 51.51.1505 M1505.4: WHOLE HOUSE MECHANICAL VENTILATION SYSTEM. EACH DWELLING UNIT SHALL BE EQUIPPED WITH A VENTILATION SYSTEM. THE WHOLE-HOUSE MECHANICAL VENTILATION SYSTEM SHALL BE DESIGNED IN ACCORDANCE WITH SECTIONS M1504.1 THROUGH 1505.4.4

IRC M1505.4.1: SYSTEM DESIGN. THE WHOLE HOUSE VENTILATION SYSTEM SHALL CONSIST OF ONE OR MORE SUPPLY FANS, ONE OR MORE EXHAUST FANS, OR AN ERV/HRV WITH INTEGRAL FANS, ASSOCIATED DUCTS AND CONTROLS. WHOLE-HOUSE MECHANICAL VENTILATION SYSTEM WITH SUPPLY AND EXHAUST FANS PER SECTIONS M1505.4.1.2, M1505.4.1.3, M1505.4.1.4 AND M1505.4.1.5. LOCAL EXHAUST FANS ARE PERMITTED TO SERVE AS PART OF THE WHOLE HOUSE VENTILATION SYSTEM WHEN PROVIDED WITH THE PROPER CONTROLS PER SECTION M1505.4.2. THE SYSTEMS SHALL BE DESIGNED AND INSTALLED TO EXHAUST AND/OR SUPPLY THE MINIMUM OUTDOOR AIRFLOW RATES PER SECTION M1505.4.3 AS MODIFIED BY WHOLE HOUSE VENTILATION SYSTEM COEFFICIENTS IN SECTION M1505.4.3.1 WHERE APPLICABLE. THE WHOLE HOUSE VENTILATION SYSTEM SHALL OPERATE CONTINUOUSLY AT THE MINIMUM VENTILATION RATE DETERMINED PER SECTION M1505.4.2 UNLESS CONFIGURED WITH INTERMITTENT OFF CONTROLS PER SECTION M1505.4.3.2.

WAC 51-51-1505 AMENDMENT M1505.4.1.1: WHOLE HOUSE SYSTEM COMPONENT REQUIREMENTS. WHOLE HOUSE VENTILATION SUPPLY AND EXHAUST FANS SPECIFIED IN THIS SECTION SHALL HAVE A MINIMUM EFFICACY AS PRESCRIBED IN THE WA. STATE ENERGY CODE. DESIGN AND INSTALLATION OF THE SYSTEM OR EQUIPMENT SHALL BE CARRIED OUT IN ACCORDANCE WITH MANUFACTURER'S INSTALLATION INSTRUCTIONS. WHOLE HOUSE VENTILATION FANS SHALL BE RATED FOR SOUND AT NO LESS THAN THE MINIMUM AIRFLOW RATE REQUIRED BY SECTION M1505.4.31. VENTILATION FANS SHALL BE RATED FOR SOUND AT A MAXIMUM OF 1.0 SONE. THIS SOUND RATING SHALL BE AT A MINIMUM OF 0.1 IN w.c. (25 Pa) STATIC PRESSURE IN ACCORDANCE WITH HVI PROCEDURES SPECIFIED IN SECTIONS M1505.4.1.2 AND M105.4.1.3.

EXCEPTION: HVAC AIR HANDLERS, ERV/HRV UNITS, AND REMOTE MOUNTED FANS NEED NOT MEET THE SOUND REQUIREMENTS. TO BE CONSIDERED FOR THIS EXCEPTION, A REMOTE MOUNTED FAN MUST BE MOUNTED OUTSIDE THE HABITABLE SPACES, BATHROOMS, TOILETS, AND HALLWAYS, AND THERE MUST BE AT LEAST 4 FT. OF DUCTWORK BETWEEN THE FAN AND THE INTAKE GRILLE. THE WHOLE HOUSE SUPPLY FAN SHALL PROVIDE DUCTED OUTDOOR VENTILATION AIR TO EACH HABITABLE SPACE WITHIN THE RESIDENTIAL UNIT.

EXCEPTION: INTERIOR JOINING SPACES PROVIDED WITH A 30 CFM WHOLE HOUSE TRANSFER FAN OR A PERMANENT OPENING WITH AN AREA OF NOT LESS THAN 8 PERCENT OF THE FLOOR AREA OF THE INTERIOR ADJOINING SPACE BUT NOT LESS THAN 25 SQUARE FEET DO NOT REQUIRE DUCTED OUTDOOR VENTILATION AIR TO BE SUPPLIED DIRECTLY TO THE SPACE. WHOLE HOUSE TRANSFER FANS SHALL MEET THE SONE RATING OF SECTION M1505.4.1.1 AND SHALL HAVE WHOLE HOSE VENTILATION CONTROLS THAT COMPLY WITH SECTION M1505.4.2

WAC 51-51-1505 M1505.4.1.2: EXHAUST FANS. EXHAUST FANS REQUIRED SHALL BE DUCTED DIRECTLY TO THE OUTSIDE. EXHAUST AIR OUTLETS SHALL BE DESIGNED TO LIMIT THE PRESSURE DIFFERENCE TO THE OUTSIDE AND EQUIPPED WITH BACKDRAFT DAMPERS OR MOTORIZED DAMPERS IN ACCORDANCE WITH THE WA STATE ENERGY CODE. EXHAUST FANS SHALL BE TESTED AND RATED IN ACCORDANCE WITH THE AIRFLOW AND SOUND RATING PROCEDURES OF THE HOME VENTILATING INSTITUTE (HVI 915, HVI LOUDNESS TESTING AND RATING PROCEDURE, HVI 916 AIRFLOW TEST PROCEDURE, AND HVI 920, HVI PRODUCT PERFORMANCE CERTIFICATION PROCEDURE, AS APPLICABLE). EXHAUST FANS REQUIRED IN THIS SECTION MAY BE USED TO PROVIDE LOCAL VENTILATION. BATHROOM EXHAUST FANS THAT ARE DESIGNED FOR INTERMITTENT EXHAUST AIRFLOW RATES HIGHER THAN THE CONTINUOUS EXHAUST AIRFLOW RATES IN TABLE M1505.4.3(3) SHALL BE PROVIDED WITH OCCUPANCY SENSORS OR HUMIDITY SENSORS TO AUTOMATICALLY OVERRIDE THE FAN TO THE HIGH SPEED AIRFLOW RATE. THE EXHAUST FANS SHALL BE TESTED AND THE TESTING RESULTS SHALL BE SUBMITTED AND POSTED IN ACCORDANCE WITH SECTION M1505.4.1.6.

WAC 51.51.1505 M1505.4.1.3: SUPPLY FANS. SUPPLY FANS USED IN MEETING THE REQUIREMENTS OF THIS SECTION SHALL SUPPLY OUTDOOR AIR FROM INTAKE OPENINGS IN ACCORDANCE WITH IMC SECTIONS 401.4 AND 401.5. WHEN DESIGNED FOR INTERMITTENT OFF OPERATION, SUPPLY SYSTEMS SHALL BE EQUIPPED WITH MOTORIZED DAMPERS IN ACCORDANCE WITH THE WA STATE ENERGY CODE. SUPPLY FANS SHALL BE TESTED AND RATED IN ACCORDANCE WITH THE AIRFLOW ANSD SOUND RATING PROCEDURES OF THE HOME VENTILATING INSTITUTE (HVI 915, HVI LOUDNESS TESTING AND RATING PROCEDURE, HVI 916, HVI AIRFLOW TEST PROCEDURE, AND HVI 920, HVI PRODUCT PERFORMANCE CERTIFICATION PROCEDURE, AS APPLICABLE). WHERE OUTDOOR AIR IS PROVIDED BY SUPPLY FAN SYSTEMS THE OUTDOOR AIR SHALL BE FILTERED. THE FILTER SHALL BE ACCESSIBLE FOR REGULAR MAINTENANCE AND REPLACEMENT. THE FILTER SHALL HAVE A MINIMUM EFFICIENCY RATING VALUE (MERVo OF AT LEAST 8.

WAC 51.51.1505 M1505.4.1.4: BALANCED WHOLE HOUSE VENTILATION SYSTEM. A BALANCED WHOLE HOUSE VENTILATING SYSTEM SHALL INCLUDE BOTH SUPPLY AND EXHAUST FANS. THE SUPPLY AND EXHAUST FANS SHALL HAVE AIRFLOW THAT IS WITHIN 10 PERCENT OF EACH OTHER. THE TESTED AND BALANCED TOTAL MECHANICAL EXHAUST AIRFLOW RATE IS WITHIN 10 PERCENT OR 5cfm, WHICHEVER IS GREATER, OF THE TOTAL MECHANICAL SUPPLY AIRFLOW RATE. THE FLOW RATE TEST RESULTS SHALL BE SUBMITTED AND POSTED IN ACCORDANCE WITH SECTION M1505.4.1.7. THE EXHAUST FAN SHALL MEET THE REQUIREMENTS OF SECTION M1505.4.1.2. THE SUPPLY FAN SHALL MEET THE REQUIREMENTS OF SECTION M1505.4.1.3. BALANCED VENTILATION SYSTEMS WITH BOTH SUPPLY AND EXHAUST AIRFLOW RATES ABOVE THE RESIDENTIAL DWELLING OR SLEEPING UNIT MINIMUM VENTILATION RATE ARE EXEMPT FROM THE BALANCED AIRFLOW CALCULATION.

WAC 51.51.1505 M1505.4.1.5: FURNACE INTEGRATED SUPPLY. SYSTEMS USING SPACE HEATING AND/OR COOLING AIR HANDLER FANS FOR OUTDOOR AIR SUPPLY DISTRIBUTION ARE NOT PERMITTED.

EXCEPTION: AIR HANDLER FANS SHALL HAVE MULTI-SPEED OR VARIABLE SPEED SUPPLY AIRFLOW CONTROL CAPABILITY WITH A LOW SPEED OPERATION NOT GREATER THAN 25 PERCENT OF THE RATED SUPPLY AIRFLOW CAPACITY DURING VENTILATION ONLY OPERATION. OUTDOOR AIR INTAKE OPENINGS MUST MEET THE PROVISIONS OF SECTIONS R303.2 AND R303.6 AND MUST INCLUDE A MOTORIZED DAMPER THAT IS ACTIVATED BY THE WHOLE HOUSE VENTILATION SYSTEM CONTROLLER. THE MOTORIZED DAMPER MUST BE CONTROLLED TO MAINTAIN THE OUTDOOR AIRFLOW INTAKE AIRFLOW WITHIN 10 PERCENT OF THE WHOLE HOUSE MECHANICAL EXHAUST AIRFLOW RATE. THE FLOW RATE FOR THE OUTDOOR AIR INTAKE MUST BE TESTED AND VERIFIED AT THE MINIMUM VENTILATION FAN SPEED AND THE MAXIMUM HEATING OR COOLING FAN SPEED. THE RESULTS OF THE TEST SHALL BE SUBMITTED AND POSTED IN ACCORDANCE WITH SECTION M1505.4.1.7.

WAC 51.51.1505 M1505.4.1.6: TESTING. WHOLE HOUSE MECHANICAL VENTILATION SYSTEMS SHALL BE TESTED, BALANCED AND VERIFIED TO PROVIDE A FLOW RATE NOT LESS THAN THE MINIMUM REQUIRED BY SECTIONS M1505.4.3 AND M1505.4.4. TESTING SHALL BE PERFORMED ACCORDING TO THE VENTILATION EQUIPMENT MANUFACTURER'S INSTRUCTIONS, OR BY USING A FLOW HOOD, FLOW GRID, OR OTHER AIRFLOW MEASURING DEVICE AT THE MECHANICAL VENTILATION FAN'S INLET TERMINALS, OUTLET TERMINALS, OR GRILLES OR IN THE CONNECTED VENTILATION DUCTS. WHERE REQUIRED BY THE BUILDING OFFICIAL, TESTING SHALL BE CONDUCTED BY AN APPROVED THIRD PARTY. A WRITTEN REPORT OF THE RESULTS OF THE TEST SHALL BE SIGNED BY THE PARTY CONDUCTING THE TEST AND PROVIDED TO THE BUILDING OFFICIAL AND BE POSTED IN THE DWELLING UNIT PER SECTION M1505.4.1.7.

WAC 51.51.1505 M1505.4.1.7: CERTIFICATE. A PERMANENT CERTIFICATE SHALL BE COMPLETED BY THE MECHANICAL CONTRACTOR, TEST AND BALANCE CONTRACTOR OR OTHER APPROVED PARTY AND POSTED ON A WALL IN THE SPACE WHERE THE FURNACE IS LOCATED, A UTILITY ROOM, OR AN APPROVED LOCATION INSIDE THE BUILDING. WHEN LOCATED ON AN ELECTRICAL PANEL, THE CERTIFICATE SHALL NOT COVER OR OBSTRUCT THE VISIBILITY OF THE CIRCUIT DIRECTORY LABEL, SERVICE DISCONNECT LABEL, OR OTHER REQUIRED LABELS THE CERTIFICATE SHALL LIST THE FLOW RATE DETERMINED FROM THE DELIVERED AIRFLOW OF THE WHOLE-HOUSE MECHANICAL VENTILATION SYSTEM AS INSTALLED AND THE TYPE OF MECHANICAL WHOLE HOUSE VENTILATION SYSTEM USED TO COMPLY WITH SECTION M1505.4.3.1.

WAC 51.51.1505 M1505.4.2: SYSTEM CONTROLS. THE WHOLE HOUSE MECHANICAL VENTILATION SYSTEM SHALL BE PROVIDED WITH CONTROLS THAT COMPLY WITH THE FOLLOWING:
1. THE WHOLE HOUSE VENTILATION SYSTEM SHALL BE CONTROLLED WITH MANUAL SWITCHES, TIMERS OR OTHER MEANS THAT PROVIDE FOR AUTOMATIC OPERATION OF THE VENTILATION SYSTEM THAT ARE READILY ACCESSIBLE BY THE OCCUPANT;
2. WHOLE HOUSE MECHANICAL VENTILATION SYSTEM SHALL BE PROVIDED WITH CONTROLS THAT ENABLE MANUAL OVERRIDE OFF OF THE SYSTEM BY THE OCCUPANT DURING PERIODS OF POOR OUTDOOR AIR QUALITY. CONTROLS SHALL INCLUDE PERMANENT TEXT OR A SYMBOL INDICATING THEIR FUNCTION. RECOMMENDED CONTROL PERMANENT LABELING TO INCLUDE TEXT SIMILAR TO THE FOLLOWING: "LEAVE ON UNLESS OUTDOOR AIR QUALITY IS VERY POOR." MANUAL CONTROLS SHALL BE READILY ACCESSIBLE BY THE OCCUPANT;
3. WHOLE HOUSE VENTILATION SYSTEMS SHALL BE CONFIGURED TO OPERATE CONTINUOUSLY EXCEPT WHERE INTERMITTENT OFF CONTROLS AND SIZING ARE PROVIDED PER SECTION M1505.4.3.2.

WAC 51.51.1505 M1505.4.3: MECHANICAL VENTILATION RATE. THE WHOLE-HOUSE MECHANICAL VENTILATION SYSTEM SHALL PROVIDE OUTDOOR AIR AT A CONTINUOUS RATE AS DETERMINED IN ACCORDANCE WITH TABLE M1505.4.3(1) OR EQUATION 15-1

EQUATION 15-1 VENTILATION RATE IN CUBIC FEET PER MINUTE = (0.01 X TOTAL SQ. FT.) + [7.5 X (NUMBER OF BEDROOMS +1)] BUT NOT LESS THAN 30 CFM FOR EACH DWELLING UNIT.

IRC TABLE 1505.4.3(1)

WHOLE-HOUSE MECHANICAL VENTILATION AIRFLOW RATE

DWELLING UNIT FLOOR AREA (Square feet)	NUMBER OF BEDROOMS				
	0-1	2-3	4-5	6-7	>7
	AIRFLOW IN CFM				
< 500	30	45	60	75	90
1,501-3,000	45	60	75	90	105
3,001-4,500	60	75	90	105	120
4,501-6,000	75	90	105	120	135
6,001-7,500	90	105	120	135	150
> 7,500	105	120	135	150	165

M1505.4.3.1: VENTILATION QUALITY ADJUSTMENT. THE MIN. WHOLE HOUSE VENTILATION RATE FROM SECTION 1505.4.3 SHALL BE ADJUSTED BY THE SYSTEM COEFFICIENT IN TABLE M1505.4.3(2) BASED ON THE SYSTEM TYPE NOT MEETING THE DEFINITION OF A *BALANCED WHOLE HOUSE VENTILATION* SYSTEM AND/OR NOT MEETING THE DEFINITION OF *DISTRIBUTED WHOLE HOSE VENTILATION* SYSTEM.

IRC TABLE 1505.4.3(2)

SYSTEM COEFFICIENT (Csystem)

SYSTEM TYPE	DISTRIBUTED	NOT DIST.
BALANCED	1.0	1.25
NOT BALANCED	1.25	1.5

M1505.4.3.2: INTERMITTENT OFF OPERATION. WHOLE-HOUSE MECHANICAL VENTILATION SYSTEMS SHALL BE PROVIDED WITH ADVANCED CONTROLS THAT ARE CONFIGURED TO OPERATE THE SYSTEM WITH INTERMITTENT OFF OPERATION SHALL OPERATE FOR AT LEAST A TWO HOURS IN EACH FOUR-HOUR SEGMENT. THE WHOLE HOUSE VENTILATION AIRFLOW RATE DETERMINED IN ACCORDANCE WITH SECTION M1505.4.3 AS CORRECTED BY SECTION M1505.4.3.1 IS ,MULTIPLIED BY THE FACTOR DETERMINED IN ACCORDANCE WITH TABLE M1505.4.3(3).

IRC TABLE 1505.4.3(3)

INTERMITTENT OFF WHOLE HOUSE MECHANICAL VENTILATION RATE FACTORS

RUN TIME % IN EA. 4-HOUR SEGMENT	50%	66%	75%	100%
FACTOR	2	1.5	1.3	1.0

M1505.4.4: LOCAL EXHAUST RATES. LOCAL EXHAUST SYSTEMS SHALL BE DESIGNED TO HAVE THE CAPACITY TO EXHAUST THE MIN. AIRFLOW RATE DETERMINED IN ACCORDANCE WITH TABLE M1505.4.4(1). IF THE LOCAL EXHAUST FAN IS INCLUDED IN THE WHOLE HOUSE VENTILATION SYSTEM, IN ACCORDANCE WITH SECTION 1505.4.1 THEN THE EXHAUST FAN SHALL BE CONTROLLED TO OPERATE AS SPECIFIED IN SECTION M1505.4.2

M1505.4.4.1: LOCAL EXHAUST. BATHROOMS, TOILET ROOMS, AND KITCHENS SHALL INCLUDE A LOCAL EXHAUST SYSTEM. SUCH LOCAL EXHAUST SYSTEMS SHALL HAVE THE CAPACITY TO EXHAUST THE MIN. AIRFLOW RATE IN ACCORDANCE WITH TABLE M1505.4.4(1). FANS REQUIRED BY THIS SECTION SHALL BE PROVIDED WITH CONTROLS THAT ENABLE MANUAL OVERRIDE OR AUTOMATIC OCCUPANCY SENSOR, HUMIDITY SENSOR OR POLLUTANT SENSOR CONTROLS. AN "ON/OFF" SWITCH SHALL MEET THIS REQUIREMENT FOR MANUAL CONTROLS. MANUAL FAN CONTROLS SHALL BE READILY ACCESSIBLE IN THE ROOM SERVED BY THE FAN.

IRC TABLE 1505.4.4(1)

MIN. LOCAL EXHAUST RATES

AREAS TO BE EXHAUSTED	INTERMITTENT	CONTINUOUS
KITCHEN	100 cfm	30 cfm
BATHROOMS - TOILET ROOMS	50 cfm	20 cfm

M1505.4.4: LOCAL EXHAUST FANS. EXHAUST FANS SHALL MEET THE FOLLOWING CRITERIA:
1. EXHAUST FANS SHALL BE TESTED AND RATED IN ACCORDANCE WITH THE AIRFLOW AND SOUND RATING PROCEDURES OF THE HOME VENTILATING INSTITUTE (HVI 915, HVI LOUDNESS AND RATING PROCEDURE, HVI AIRFLOW TEST PROCEDURE, AND HVI 920, HVI PRODUCT PERFORMANCE CERTIFICATION PROCEDURE).
EXCEPTION: WHERE A RANGE HOOD OR DOWN DRAFT EXHAUST FAN IS USED FOR LOCAL EXHAUST FOR A KITCHEN, THE DEVICE IS NOT REQUIRED TO BE RATED PER THESE STANDARDS.
2. FAN AIRFLOW RATING AND DUCT SYSTEM SHALL BE DESIGNED AND INSTALLED TO DELIVER AT LEAST THE EXHAUST AIRFLOW REQUIRED BY TABLE M1505.4.4(1). THE AIRFLOWS REQUIRED REFER TO THE DELIVERED AIRFLOW OF THE SYSTEM AS INSTALLED AND TESTED USING A FLOW HOOD, FLOW GRID, OR OTHER AIRFLOW MEASUREMENT DEVICE. LOCAL EXHAUST SYSTEMS SHALL BE TESTED, BALANCED AND VERIFIED TO PROVIDE A FLOW RATE NOT LESS THAN THE MINIMUM REQUIRED BY THIS SECTION.
3. DESIGN AND INSTALLATION OF THE SYSTEM OR EQUIPMENT SHALL BE CARRIED OUT IN ACCORDANCE WITH MANUFACTURER'S INSTALLATION INSTRUCTIONS.
4. FAN AIRFLOW RATING AND DUCT SYSTEM SHALL BE DESIGNED AND INSTALLED TO DELIVER AT LEAST THE EXHAUST AIRFLOW REQUIRED BY TABLE M1505.4.4(1).
EXCEPTIONS: 1. AN EXHAUST AIRFLOW RATING AT A PRESSURE OF 0.25 IN. w.g. MAY BE USED, PROVIDED THE DUCT SIZING MEETS THE PRESCRIPTIVE REQUIREMENTS OF TABLE M1505.4.4(2).
2. WHERE A RANGE HOOD OR DOWN DRAFT EXHAUST FAN IS USED TO SATISFY THE LOCAL VENTILATION REQUIREMENTS FOR KITCHENS, THE RANGE HOOD OR DOWN DRAFT EXHAUST SHALL NOT BE LESS THAN 100 CFM AT 0.10 IN. w.g.

2018 WSEC TABLE R402.1.1

INSULATION AND FENESTRATION REQUIREMENTS BY COMPONENT

CLIMATE ZONE 5 AND MARINE 4	
FENESTRATION U-FACTOR	0.28*
SKYLIGHT U-FACTOR	0.50
CEILING (ATTIC) R-VALUE	49
CEILING (VAULT) R-VALUE	38
WOOD FRAMED WALL R-VALUE	21 int.
FLOOR R-VALUE	38*
BELOW GRADE WALL	21 int. + TB
SLAB R-VALUE & DEPTH	10 @ ENTIRE SLAB*

* INDICATES INCREASED VALUE DUE TO REQUIRED ENERGY CREDITS

ADDITIONAL ENERGY EFFICIENCY REQUIREMENTS PER WSEC R406:
LARGE DWELLING UNIT (OVER 5,000 S.F.)- 7.0 CREDITS REQUIRED
PROPOSED:

OPTION	FUEL NORMALIZATION DESCRIPTION:	CREDITS
2	HEAT PUMP w/ MIN. EFFICIENCY OF 10.8 EER, 14.4 IEER PER C403.3.2(1)C	1.0
OPTION	**ENERGY CREDIT OPTION DESCRIPTION:**	
1.3	EFFICIENT BUILDING ENVELOPE: VERTICAL FENESTRATION- U=0.28, FLOOR- R-38, SLAB ON GRADE/BELOW GRADE SLAB- R-10 PERIMETER + UNDER ENTIRE SLAB	0.5
2.2	REDUCE TESTED AIR LEAKAGE TO 2.0 AIR CHANGES PER HOUR MAX. @ 50 PASCALS; WHOLE HOUSE VENTILATION PER IRC M1507.3 TO BE MET W/ HEAT RECOVERY VENTILATION SYSTEM W/ MIN. SENSIBLE HEAT RECOVERY EFFICIENCY OF 0.65.	1.0
3.5	AIR SOURCE, CENTRALLY DUCTED HEAT PUMP W/ MIN. HSPF OF 11	1.5
4.2	ALL HVAC DUCTS AND COMPONENTS TO BE LOCATED IN CONDITIONED SPACE PER R403.3.7	1.0
5.4	EFF. WATER HEATING: ELECTRIC HEAT PUMP WATER HEATER TO MEET TIER I OF NEEA'S ADVANCED WATER HEATING SPECIFICATION	1.5
7.1	APPLIANCE PACKAGE: ENERGY STAR RATED DISHWASHER, REFRIG., WASHING MACHINE & DRYER (VENTLESS W/ MIN. CEF 5.2)	0.5
	TOTAL	7.0

FOR FULL TEXT AND INFORMATION, SEE WASHINGTON STATE ENERGY CODE, SECTION R406

DRAWING INDEX:

A0 COVER SHEET

1 OF 1 TOPOGRAPHIC & BOUNDARY SURVEY

1 OF 6 COVER SHEET (CIVIL)
2 OF 6 T.E.S.C. PLAN
3 OF 6 TREE RETENTION PLAN
4 OF 6 SITE IMPROVEMENT PLAN
5 OF 6 C.O.M.I. STANDARD DETAILS
6 OF 6 OFF SITE STORM EXTENSION

A1 SITE PLAN
A1.1 SITE INFO & CALCS
A1.2 EXCAVATION EXTENTS PLAN
A2 FOUNDATION PLAN
A3 LOWER LEVEL FLOOR PLAN
A4 MAIN FLOOR FRAMING PLAN
A5 MAIN FLOOR PLAN
A6 UPPER FLOOR FRAMING PLAN
A7 UPPER FLOOR PLAN
A8 ROOF DECK PLAN
A9 ROOF FRAMING PLAN
A10 EXTERIOR ELEVATIONS
A11 EXTERIOR ELEVATIONS
A12 BUILDING SECTIONS
A13 ARCHITECTURAL DETAILS
A14 ARCHITECTURAL DETAILS

S-0 STRUCTURAL NOTES
SD-1 STRUCTURAL DETAILS
SD-2 STRUCTURAL DETAILS
SD-3 STRUCTURAL DETAILS
SD-4 STRUCTURAL DETAILS
SD-5 STRUCTURAL DETAILS
SD-6 STRUCTURAL DETAILS
SD-7 STRUCTURAL DETAILS

SP-1 FOUNDATION DETAILS (SOLDIER PILE WALL)
SP-2 FOUNDATION DETAILS (SOLDIER PILE WALL)
SP-3 FOUNDATION DETAILS (DRIVEN PILE WALL)

M1.0 GENERAL NOTES, SCHEDULES & LEGEND
M2.0 BASEMENT FLOOR PLAN- HVAC
M3.0 MAIN FLOOR PLAN- HVAC
M4.0 UPPER FLOOR PLAN- HVAC

BUILDING AREA SUMMARY:

ALL NUMBERS IN SQUARE FEET

LOWER FLOOR	1660
MAIN FLOOR	1869
UPPER FLOOR	1916
TOTAL	5445
GARAGE	683

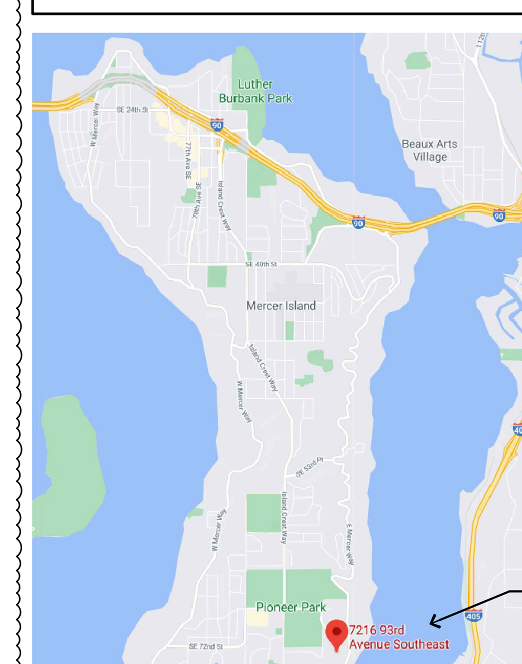

LOCATION OF SITE

VICINITY MAP

N.T.S.

MCCULLOUGH ARCHITECTS
5601 6th Ave S, Suite 371
Seattle, WA 98108
206.443.1181
mcculougharchitects.com

UNPUBLISHED WORK 2022 © McCullough Architects

Revisions	Comment
2022.05.03	permit response
2022.11.14	permit response

Date:	2021.05.10
Job No:	19-034
Project No:	00000
Drawn:	MCG
Approved:	APM

Owner:
PREMIUM HOMES
IN MERCER ISLAND LLC

REGISTERED ARCHITECT
7806
A. PHILIP MCCULLOUGH
STATE OF WASHINGTON

LOT 1

7216 93rd AVE. SE
MERCER ISLAND, WA 98040

Permit Submittal Set

Cover Sheet

A0

TOPOGRAPHIC SURVEY

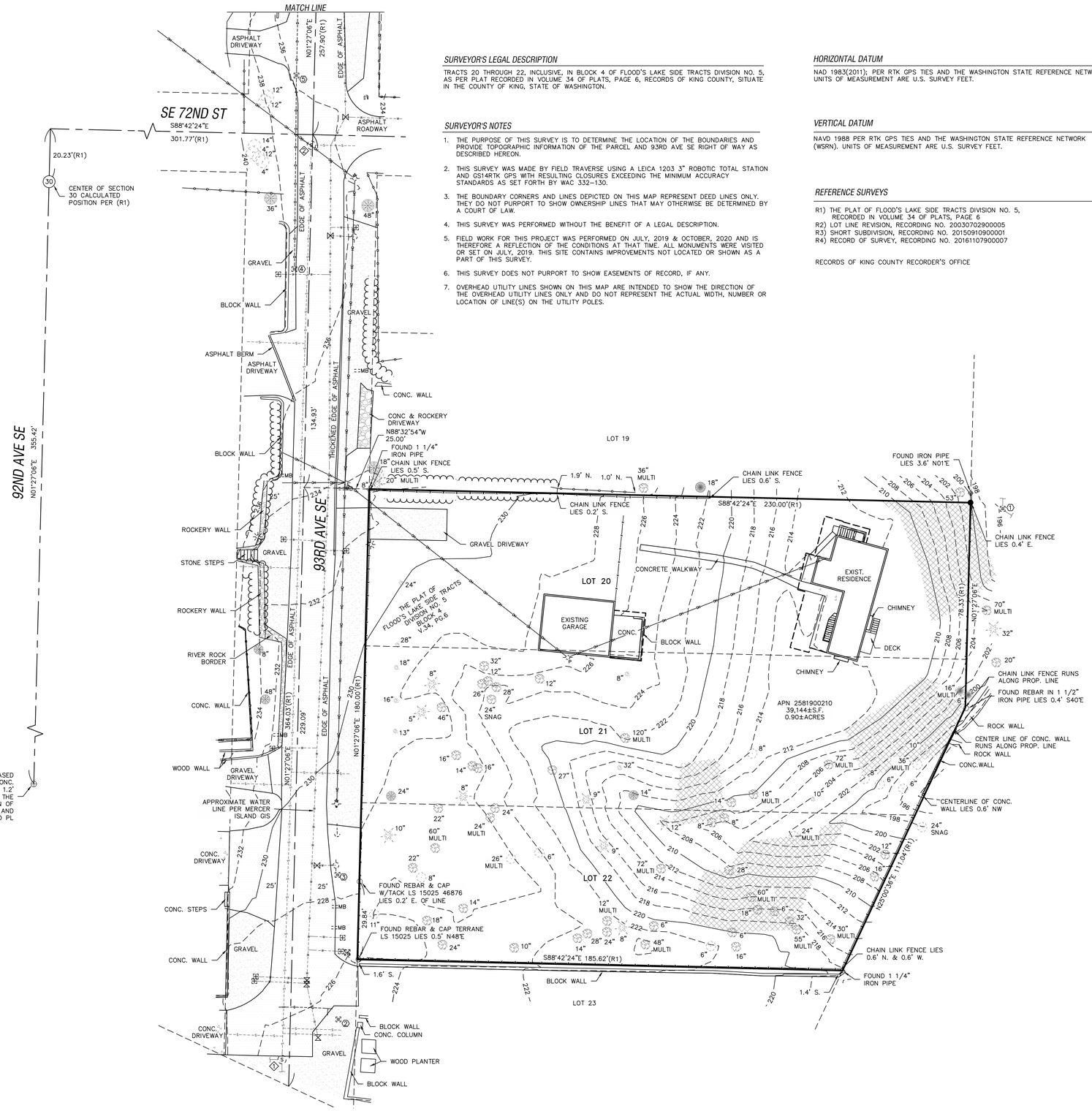

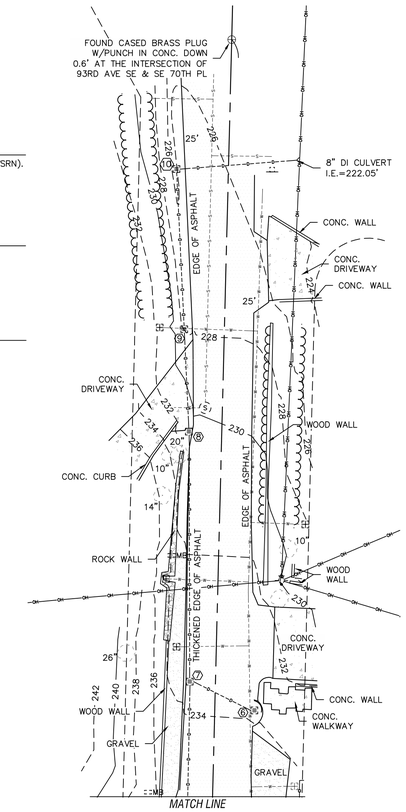

SURVEYOR'S LEGAL DESCRIPTION

TRACTS 20 THROUGH 22, INCLUSIVE, IN BLOCK 4 OF FLOOD'S LAKE SIDE TRACTS DIVISION NO. 5, AS PER PLAT RECORDED IN VOLUME 34 OF PLATS, PAGE 6, RECORDS OF KING COUNTY, SITUATE IN THE COUNTY OF KING, STATE OF WASHINGTON.

SURVEYOR'S NOTES

1. THE PURPOSE OF THIS SURVEY IS TO DETERMINE THE LOCATION OF THE BOUNDARIES AND PROVIDE TOPOGRAPHIC INFORMATION OF THE PARCEL AND 93RD AVE SE RIGHT OF WAY AS DESCRIBED HEREON.
2. THIS SURVEY WAS MADE BY FIELD TRAVERSE USING A LEICA 1203 3" ROBOTIC TOTAL STATION AND GS14RTK GPS WITH RESULTING CLOSURES EXCEEDING THE MINIMUM ACCURACY STANDARDS AS SET FORTH BY WAC 332-130.
3. THE BOUNDARY CORNERS AND LINES DEPICTED ON THIS MAP REPRESENT DEED LINES ONLY. THEY DO NOT PURPORT TO SHOW OWNERSHIP LINES THAT MAY OTHERWISE BE DETERMINED BY A COURT OF LAW.
4. THIS SURVEY WAS PERFORMED WITHOUT THE BENEFIT OF A LEGAL DESCRIPTION.
5. FIELD WORK FOR THIS PROJECT WAS PERFORMED ON JULY, 2019 & OCTOBER, 2020 AND IS THEREFORE A REFLECTION OF THE CONDITIONS AT THAT TIME. ALL MONUMENTS WERE VISITED OR SET ON JULY, 2019. THIS SITE CONTAINS IMPROVEMENTS NOT LOCATED OR SHOWN AS A PART OF THIS SURVEY.
6. THIS SURVEY DOES NOT PURPORT TO SHOW EASEMENTS OF RECORD, IF ANY.
7. OVERHEAD UTILITY LINES SHOWN ON THIS MAP ARE INTENDED TO SHOW THE DIRECTION OF THE OVERHEAD UTILITY LINES ONLY AND DO NOT REPRESENT THE ACTUAL WIDTH, NUMBER OR LOCATION OF LINE(S) ON THE UTILITY POLES.

HORIZONTAL DATUM

NAD 1983(2011); PER RTK GPS TIES AND THE WASHINGTON STATE REFERENCE NETWORK (WSRN). UNITS OF MEASUREMENT ARE U.S. SURVEY FEET.

VERTICAL DATUM

NAVD 1988 PER RTK GPS TIES AND THE WASHINGTON STATE REFERENCE NETWORK (WSRN). UNITS OF MEASUREMENT ARE U.S. SURVEY FEET.

REFERENCE SURVEYS

R1) THE PLAT OF FLOOD'S LAKE SIDE TRACTS DIVISION NO. 5, RECORDED IN VOLUME 34 OF PLATS, PAGE 6
R2) LOT LINE REVISION, RECORDING NO. 20030702900005
R3) SHORT SUBDIVISION, RECORDING NO. 201509109000 01
R4) RECORD OF SURVEY, RECORDING NO. 20161107900007

RECORDS OF KING COUNTY RECORDER'S OFFICE

SEWER STRUCTURE TABLE

1. SEWER MANHOLE
   RIM EL=225.11'
   (N) 8" IRON I.E.=212.81'
   (S,W) I.E.=212.91'
2. SEWER MANHOLE
   RIM EL=236.50'
   (E) 8" IRON I.E.=211.60'
   (S) 8" IRON I.E.=211.70'
   (NW) 8" IRON I.E.=211.70'

STORM STRUCTURE TABLE

1. CATCH BASIN
   39B-36
   RIM EL=195.52'
   (N) 12" PVC I.E.=191.92'
   (SE) 8" DI I.E.=191.92'
2. DRYWELL
   39B-70
   RIM EL=225.14'
   I.E. TOP GRAVEL=222.84'
3. DRYWELL
   39B-72
   RIM EL=228.23'
   I.E. TOP GRAVEL=225.93'
4. CATCH BASIN
   40B-91
   RIM EL=236.27'
   (N) 8" PVC I.E.=234.97'
5. CATCH BASIN
   40B-75
   RIM EL=235.90'
   (S) 8" PVC I.E.=234.05'
   (N) 8" PVC I.E.=233.98'
6. CATCH BASIN
   40B-76
   RIM EL=233.69'
   (NW) 8" PVC I.E.=232.04'
7. CATCH BASIN
   40B-74
   RIM EL=233.52'
   (SE) 8" PVC I.E.=231.82'
   (S) 8" PVC I.E.=231.92'
   (N) 8" PVC I.E.=231.72'
8. CATCH BASIN
   40B-9
   RIM EL=230.13'
   (S) 8" PVC I.E.=228.83'
   (N) 8" PVC I.E.=228.53'
9. CATCH BASIN
   40B-51
   RIM EL=227.87'
   (N) 8" PVC I.E.=226.42'
   (S) 8" PVC I.E.=226.57'
10. CATCH BASIN
    40B-52
    RIM EL=225.46'
    (S) 8" PVC I.E.=223.91'
    (E) 8" DI I.E.=223.91'

LEGEND

- SET REBAR & CAP EMW LS #44651
- FOUND REBAR & CAP (AS SHOWN)
- FOUND IRON PIPE (AS SHOWN)
- FOUND CASED MONUMENT (AS SHOWN)
- GUY ANCHOR
- POWER POLE
- POWER POLE W/TRANSFORMER
- POWER POLE W/TRANSFORMER & DROP
- YARD LIGHT
- STORM DRAIN CATCH BASIN
- SEWER MANHOLE
- FIRE HYDRANT
- WATER METER
- IRRIGATION CONTROL BOX
- WATER VALVE
- HOSE BIB
- MAIL BOX
- TREE STUMP
- CEDAR TREE
- FRUIT TREE
- DECIDUOUS TREE
- MAPLE TREE
- EVERGREEN TREE
- (R) DISTANCE PER REFERENCE
- LS LICENSED LAND SURVEYOR
- =40% OR > SLOPE WITH VERTICAL RELIEF

LINE TYPE LEGEND

- CHAIN LINK FENCE
- WOOD FENCE
- GAS PAINT LINE
- OVERHEAD UTILITY LINE
- STORM DRAIN LINE
- EDGE OF HEDGES
- SEWER LINE
- APPROXIMATE WATER LINE

GRAPHIC SCALE
0 10 20 40
1" = 20 FEET

SHT. 1 OF 1

LOCATED IN NW 1/4 OF THE SE 1/4 OF SECTION 30, TOWNSHIP 24N, RANGE 5E, W.M.

FOR: BARCELO HOMES

MERCER ISLAND, KING COUNTY, WA

TOPOGRAPHIC SURVEY

DRAFTED: JR | CHECKED: EMW
DATE: 10/30/2020 | JOB NO.: BARCE-190624
SCALE: 1"=20' | FIELD CREW: AG, AW, TM

EVAN M. WAHLSTROM, STATE OF WASHINGTON, REGISTERED PROFESSIONAL LAND SURVEYOR, 10/30/2020

7216 93RD AVE SE
MERCER ISLAND, WA 98040
TAX PARCEL NO. 2581900210

informed land survey
PO Box 5127
Tacoma, WA 98415-0137
Phone: 253-627-2070
admin@landsurvey.com
www.landsurvey.com
LAND SURVEYING • MAPPING • CONSTRUCTION LAYOUT

NW 1/4 OF SE 1/4 OF SEC. 30, TWP. 24N., RNG. 5E., W.M.

COVER SHEET

LOT 1 SFR (93RD AVE SE)

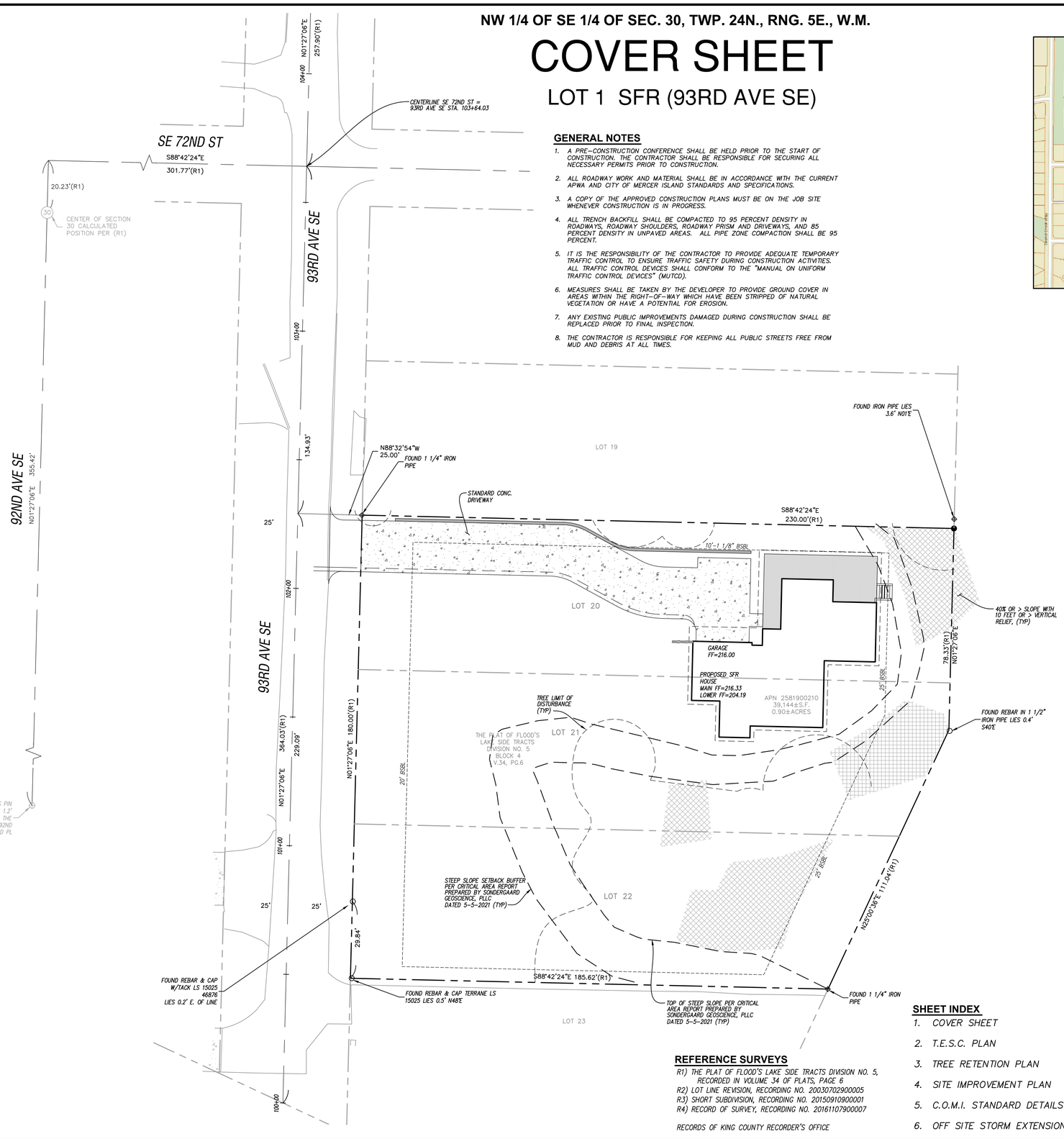

GENERAL NOTES

1. A PRE-CONSTRUCTION CONFERENCE SHALL BE HELD PRIOR TO THE START OF CONSTRUCTION. THE CONTRACTOR SHALL BE RESPONSIBLE FOR SECURING ALL NECESSARY PERMITS PRIOR TO CONSTRUCTION.
2. ALL ROADWAY WORK AND MATERIAL SHALL BE IN ACCORDANCE WITH THE CURRENT APWA AND CITY OF MERCER ISLAND STANDARDS AND SPECIFICATIONS.
3. A COPY OF THE APPROVED CONSTRUCTION PLANS MUST BE ON THE JOB SITE WHENEVER CONSTRUCTION IS IN PROGRESS.
4. ALL TRENCH BACKFILL SHALL BE COMPACTED TO 95 PERCENT DENSITY IN ROADWAYS, ROADWAY SHOULDERS, ROADWAY PRISM AND DRIVEWAYS, AND 85 PERCENT DENSITY IN UNPAVED AREAS. ALL PIPE ZONE COMPACTION SHALL BE 95 PERCENT.
5. IT IS THE RESPONSIBILITY OF THE CONTRACTOR TO PROVIDE ADEQUATE TEMPORARY TRAFFIC CONTROL TO ENSURE TRAFFIC SAFETY DURING CONSTRUCTION ACTIVITIES. ALL TRAFFIC CONTROL DEVICES SHALL CONFORM TO THE "MANUAL ON UNIFORM TRAFFIC CONTROL DEVICES" (MUTCD).
6. MEASURES SHALL BE TAKEN BY THE DEVELOPER TO PROVIDE GROUND COVER IN AREAS WITHIN THE RIGHT-OF-WAY WHICH HAVE BEEN STRIPPED OF NATURAL VEGETATION OR HAVE A POTENTIAL FOR EROSION.
7. ANY EXISTING PUBLIC IMPROVEMENTS DAMAGED DURING CONSTRUCTION SHALL BE REPLACED PRIOR TO FINAL INSPECTION.
8. THE CONTRACTOR IS RESPONSIBLE FOR KEEPING ALL PUBLIC STREETS FREE FROM MUD AND DEBRIS AT ALL TIMES.

LEGEND

- SET REBAR & CAP EMW LS #44651
- FOUND IRON PIPE (AS SHOWN)
- FOUND CASED MONUMENT (AS SHOWN)
- MB MAIL BOX
- YARD LIGHT
- POWER POLE
- POWER POLE W/TRANSFORMER & DROP
- WATER METER
- FIRE HYDRANT
- WATER VALVE
- IRRIGATION CONTROL BOX
- CATCH BASIN OR DRYWELL (AS SHOWN)
- SEWER MANHOLE
- CEDAR TREE
- FRUIT TREE
- MAPLE TREE
- EVERGREEN TREE
- TREE STUMP
- ★ EXCEPTIONAL TREE >=24"
- STORM DRAIN LINE
- SEWER LINE
- APPROXIMATE WATER LINE
- OVERHEAD UTILITY LINE
- WOOD FENCE
- CHAIN LINK FENCE
- EDGE OF HEDGES
- (R) DISTANCE PER REFERENCE
- =40% OR > SLOPE WITH 10 FEET OR > VERTICAL RELIEF

Know what's **below.** **Call** before you dig.

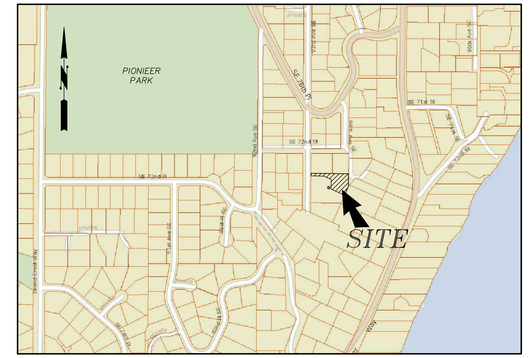

VICINITY MAP
NOT TO SCALE

PROJECT DATA

PROPERTY ADDRESS:	7216 93RD AVENUE SE MERCER ISLAND, WA 98040
TAX LOT NUMBER:	258190-0210
SITE AREA:	39,144 SF (0.90 ACRES)
ZONING	R-8.4

PROJECT TEAM

OWNER:	PREMIUM HOMES OF MERCER ISLAND LLC PO BOX 1639 MERCER ISLAND, WA 98040 (206) 724-1072 CONTACT: BOGDAN MAKSIMCHUK
ARCHITECT:	McCULLOUGH ARCHITECTS 2910 FIRST AVENUE SOUTH, SUITE 201 SEATTLE, WA 98134 (206) 443-1181 CONTACT: MATT GLASER
CIVIL ENGINEER:	G2 CIVIL 1700 NW GILMAN BLVD, SUITE 200 ISSAQUAH, WA 98027 (425) 821-5038 CONTACT: NICOLE MECUM, PE
SURVEYOR:	INFORMED LAND SURVEYING PO BOX 5137 TACOMA, WA 98415-0137 (253) 627-2070 CONTACT: EVAN WAHLSTROM, PLS
GEOTECHNICAL ENGINEERS:	SONDERGAARD GEOSCIENCE, PLLC 13012 65TH AVENUE SE SNOHOMISH, WA 98296 (425) 375-4727 CONTACT: JON SONDERGAARD, LEG ROBERT M. PRIDE, LLC 13203 HOLMES POINT DRIVE NE KIRKLAND, WA 98034 (425) 814-3970 CONTACT: ROBERT PRIDE
WETLAND CONSULTANT:	WETLAND RESOURCES, INC. 9505 19TH AVENUE SE, SUITE 106 EVERETT, WA 98208 (425) 337-3174 CONTACT: NIELS PEDERSEN, PWS
ARBORIST:	LAYTON TREE CONSULTING, LLC PO BOX 572 SNOHOMISH, WA 98291-0572 (425) 220-5711 CONTACT: BOB LAYTON

LEGAL DESCRIPTION

TRACTS 20 THROUGH 22, INCLUSIVE, IN BLOCK 4 OF FLOOD'S LAKE SIDE TRACTS RECORDED IN VOLUME 34 OF PLATS, PAGE 6, RECORDS OF KING COUNTY, SITUATE IN THE COUNTY OF KING, STATE OF WASHINGTON.

HORIZONTAL DATUM

NAD 1983(2011) PER RTK GPS TIES AND THE WASHINGTON STATE REFERENCE NETWORK (WSRN). UNITS OF MEASUREMENT ARE U.S. SURVEY FEET.

VERTICAL DATUM

NAVD 1988 PER RTK GPS TIES AND THE WASHINGTON STATE REFERENCE NETWORK (WSRN). UNITS OF MEASUREMENT ARE U.S. SURVEY FEET.

SURVEYOR'S NOTES

1. THIS SURVEY WAS MADE BY FIELD TRAVERSE USING A LEICA 1203 3" ROBOTIC TOTAL STATION AND GS14RTK GPS WITH RESULTING CLOSURES EXCEEDING THE MINIMUM ACCURACY STANDARDS AS SET FORTH BY WAC 332-130.
2. FIELD WORK FOR THIS PROJECT WAS PERFORMED ON JULY 2, 2019 AND IS THEREFORE A REFLECTION OF THE CONDITIONS AT THAT TIME. ALL MONUMENTS WERE VISITED OR SET ON JULY 2, 2019. THIS SITE CONTAINS IMPROVEMENTS NOT LOCATED OR SHOWN AS A PART OF THIS SURVEY.

NOTE

G2 CIVIL WAS NOT AWARE OF THE ISSUES ASSOCIATED WITH THE PERMIT CE20-0057 AND WILL NOT ACCEPT ANY LIABILITY REGARDING THIS PERMIT.

REFERENCE SURVEYS

R1) THE PLAT OF FLOOD'S LAKE SIDE TRACTS DIVISION NO. 5, RECORDED IN VOLUME 34 OF PLATS, PAGE 6
R2) LOT LINE REVISION, RECORDING NO. 20030702900005
R3) SHORT SUBDIVISION, RECORDING NO. 20150910900001
R4) RECORD OF SURVEY, RECORDING NO. 20161107900007

RECORDS OF KING COUNTY RECORDER'S OFFICE

SHEET INDEX

1. COVER SHEET
2. T.E.S.C. PLAN
3. TREE RETENTION PLAN
4. SITE IMPROVEMENT PLAN
5. C.O.M.I. STANDARD DETAILS
6. OFF SITE STORM EXTENSION

APPROVED: _____
CITY OF MERCER ISLAND DEVELOPMENT SERVICES GROUP Date

DWN BY	CHKD BY	DATE	NOTES
KAL	KAL	3-30-21	SUBMITTED TO CLIENT
KAL	KAL	5-25-21	REVISED PER CITY COMMENTS
JAT	NEM	4-28-22	REVISED PER CITY COMMENTS
TLK	NEM	10-24-22	REVISED PER CITY COMMENTS

G2 CIVIL
1700 NW GILMAN BLVD, STE 200
ISSAQUAH, WA 98027
PHONE: (425) 821-5038

COVER SHEET
LOT 1 - SFR (93RD AVE SE)

PREMIUM HOMES OF MERCER ISLAND LLC
PO BOX 1639
MERCER ISLAND, WA 98040
(206) 724-1072

JOB No.

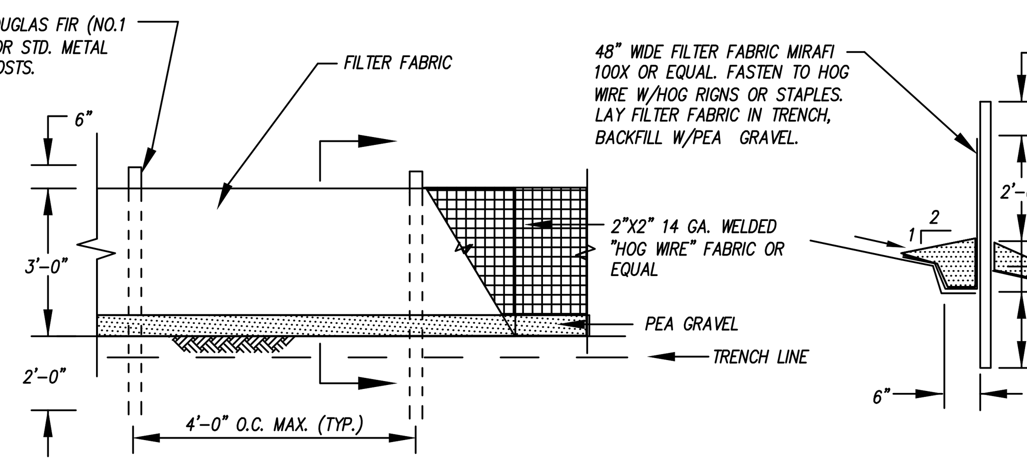

FILTER FABRIC FENCING

N.T.S.

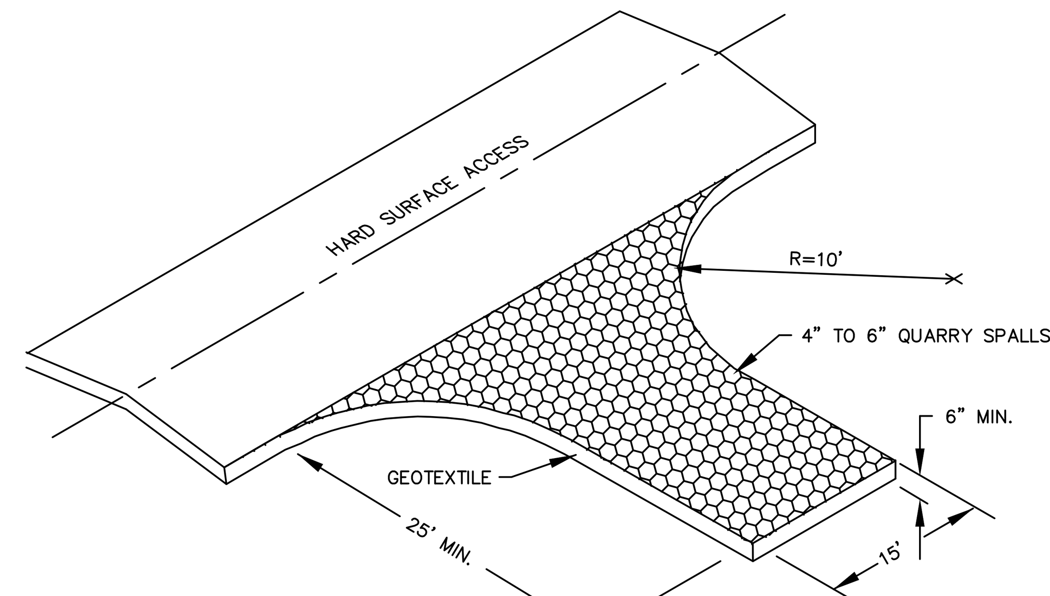

TEMPORARY GRAVEL CONSTRUCTION ENTRANCE

N.T.S.

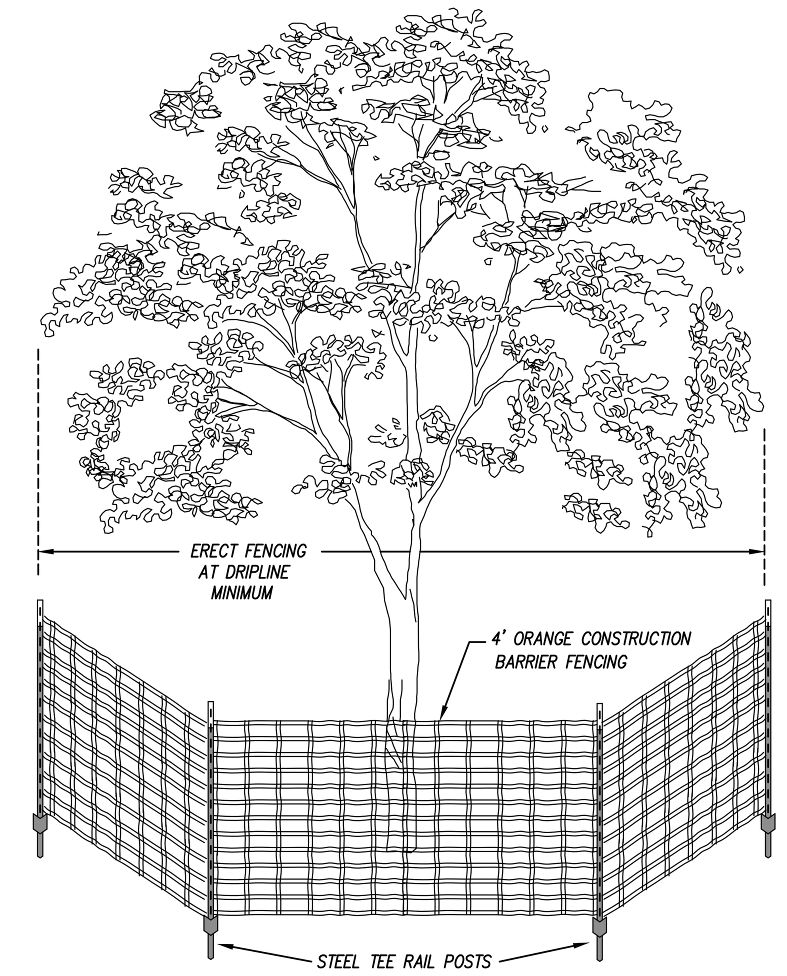

TREE PROTECTION DETAIL

N.T.S.

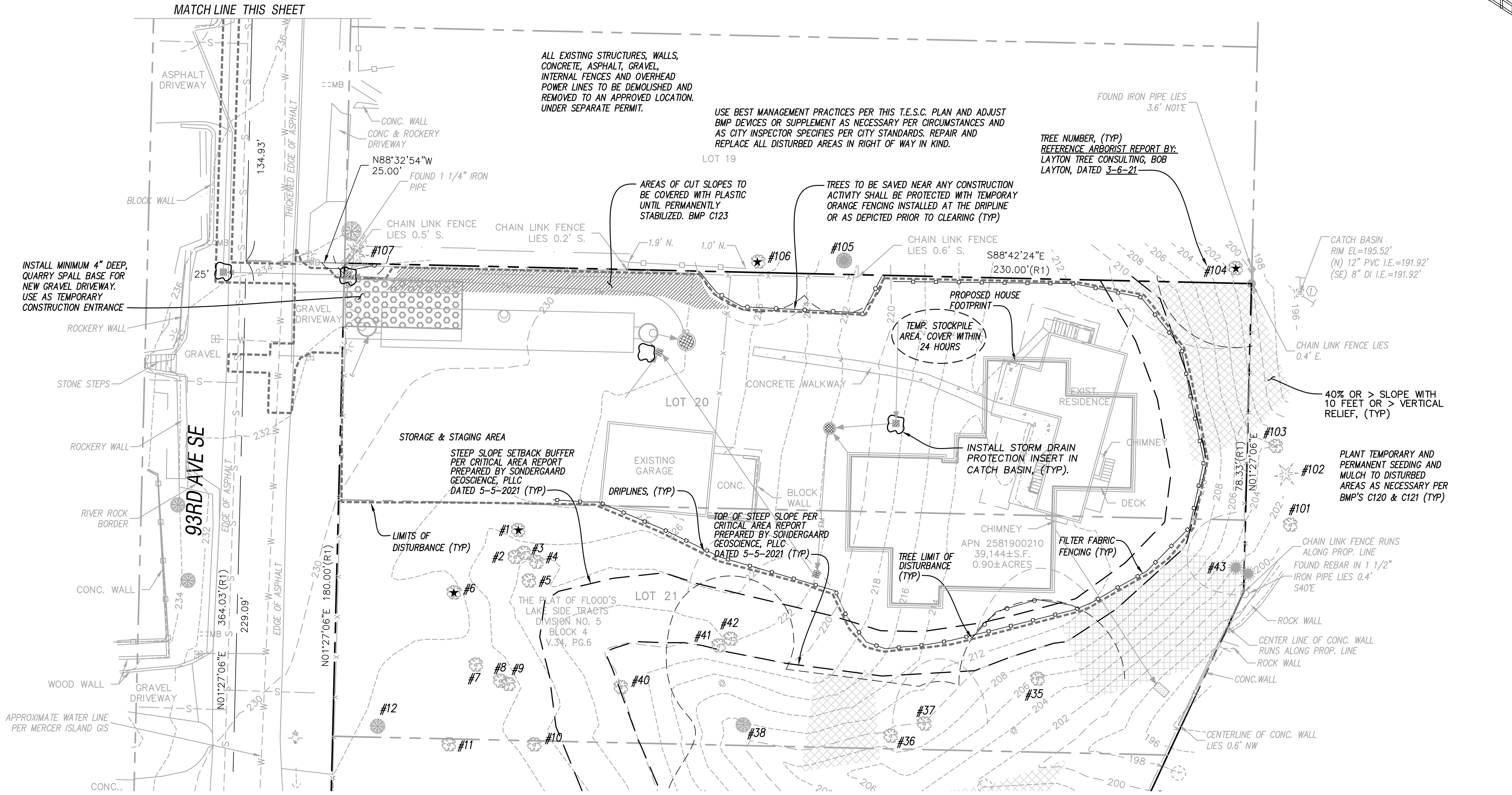

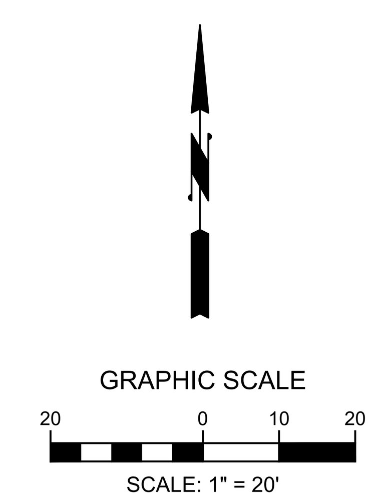

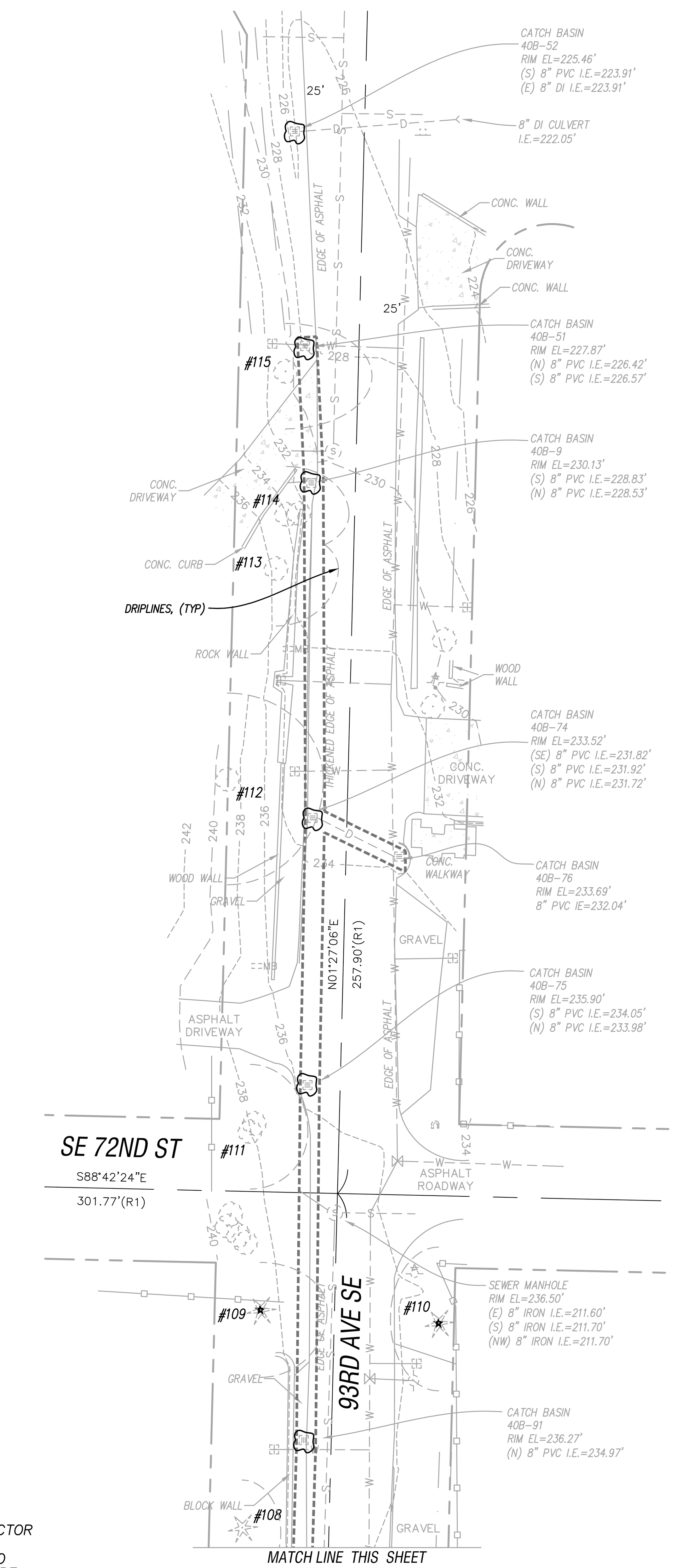

EROSION / SEDIMENTATION CONTROL NOTES

1. PRIOR TO BEGINNING EARTH DISTURBING ACTIVITIES, INCLUDING CLEARING AND GRADING, ALL CLEARING LIMITS, EASEMENTS, SETBACKS, TREES AND DRAINAGE COURSES SHALL BE CLEARLY DEFINED AND MARKED IN THE FIELD TO PREVENT DAMAGE AND OFFSITE IMPACTS.
2. CONSTRUCTION VEHICLE ACCESS AND EXIT SHALL BE LIMITED TO ONE ROUTE IF POSSIBLE. ACCESS POINTS SHALL BE STABILIZED WITH QUARRY SPALLS OR CRUSHED ROCK TO MINIMIZE THE TRACKING OF SEDIMENTS ONTO PUBLIC STREETS. WHEEL WASH OR TIRE BATHS SHALL BE LOCATED ON-SITE. IF SEDIMENT IS TRANSPORTED ONTO A ROAD SURFACE, THE PAVEMENT SHALL BE CLEANED THOROUGHLY AT THE END OF EACH DAY. SEDIMENT SHALL BE REMOVED FROM THE PAVEMENT BY SHOVELING OR SWEEPING AND BE TRANSPORTED TO A CONTROLLED SEDIMENT DISPOSAL AREA. STREET WASHING WILL ONLY BE ALLOWED AFTER SEDIMENT IS REMOVED IN THIS MANNER. PAVEMENT WASHING SHALL NOT OCCUR UNTIL ALL STORM DRAIN INLETS, LOCATED DOWNSTREAM OF THE WASHING AREA, HAVE BEEN PROTECTED BY PLACEMENT OF A FILTER CLOTH UNDER THE INLET GRATE.
3. PROPERTIES AND WATERWAYS DOWNSTREAM FROM THE DEVELOPMENT SITE SHALL BE PROTECTED FROM EROSION DUE TO INCREASES IN THE VOLUME, VELOCITY, AND PEAK FLOW RATE OF STORMWATER RUNOFF FROM THE PROJECT SITE.
4. PRIOR TO LEAVING THE SITE, STORMWATER RUNOFF SHALL PASS THROUGH APPROVED SEDIMENT BARRIERS OR FILTERS, DIKES, OR ANY OTHER APPROVED FACILITY INTENDED TO TRAP SEDIMENT. THESE SEDIMENT CONTROLLING MEASURES SHALL BE CONSTRUCTED AS THE FIRST STEP IN GRADING. THESE FACILITIES SHALL BE FUNCTIONAL BEFORE ANY OTHER LAND DISTURBING ACTIVITY TAKES PLACE. EARTHEN STRUCTURES SUCH AS DAMS, DIKES, AND DIVERSIONS SHALL BE SEEDED AND MULCHED ACCORDING TO THE TIMING INDICATED UNDER ITEM 5.
5. ALL EXPOSED AND UNWORKED SOILS SHALL BE STABILIZED BY THE PLACEMENT OF SOD OR OTHER VEGETATION, PLASTIC COVERING, MULCHING, APPLICATION OF BASE ROCK WITHIN AREAS TO BE PAVED, OR SOME OTHER APPROVED MEANS, TO PROTECT THE SOIL FROM THE EROSIVE FORCES OF RAINDROP IMPACT AND FLOWING WATER. FROM OCTOBER 1 THROUGH APRIL 30, NO SOILS SHALL REMAIN EXPOSED AND UNWORKED FOR MORE THAN 2 DAYS. FROM MAY 1 THROUGH SEPTEMBER 30, NO SOIL SHALL REMAIN EXPOSED AND UNWORKED FOR MORE THAN 7 DAYS. THIS CONDITION APPLIES TO ALL SOILS ON SITE, WHETHER AT FINAL GRADE OR NOT. THE SOIL STABILIZATION MEASURES SELECTED SHOULD BE APPROPRIATE FOR THE TIME OF YEAR, SITE CONDITIONS, ESTIMATED DURATION OF USE, AND THE POTENTIAL WATER QUALITY IMPACTS THAT THE STABILIZATION MEASURES MAY HAVE ON THE DOWNSTREAM WATERS. SOIL STOCKPILES SHALL BE STABILIZED AND PROTECTED WITH SEDIMENT TRAPPING MEASURES.
6. CUT AND FILL SLOPES SHALL BE DESIGNED AND CONSTRUCTED IN A MANNER THAT WILL MINIMIZE EROSION. CONSIDER SOIL TYPE AND ITS POTENTIAL FOR EROSION. REDUCE SLOPE RUNOFF VELOCITIES BY (1) REDUCING THE LENGTH OF CONTINUOUS SLOPES BY USING TERRACING AND DIVERSIONS, (2) REDUCING THE GRADE OF THE SLOPE, AND (3) ROUGHEN SLOPE SURFACE. CONTAIN DOWNSLOPE COLLECTED WATER IN PIPES OR PROTECTED CHANNELS.
7. ALL STORM DRAIN INLETS MADE OPERABLE DURING CONSTRUCTION SHALL BE PROTECTED SO THAT STORMWATER RUNOFF SHALL NOT ENTER THE CONVEYANCE SYSTEM WITHOUT FIRST BEING FILTERED OR TREATED TO REMOVE SEDIMENTS.
8. ALL TEMPORARY ON-SITE CONVEYANCE CHANNELS SHALL BE DESIGNED, CONSTRUCTED AND STABILIZED TO PREVENT EROSION. STABILIZATION, INCLUDING ARMORING MATERIAL, ADEQUATE TO PREVENT EROSION AT ALL DISCHARGE POINTS, ADJACENT STREAM BANKS, SLOPES AND DOWNSTREAM REACHES, SHALL BE PROVIDED.
9. ALL POLLUTANTS, INCLUDING WASTE MATERIALS AND DEMOLITION DEBRIS, THAT OCCUR ON-SITE DURING CONSTRUCTION SHALL BE HANDLED AND DISPOSED OF IN A MANNER THAT DOES NOT CAUSE CONTAMINATION OF STORMWATER. MAINTENANCE AND REPAIR OF HEAVY EQUIPMENT AND VEHICLES INVOLVING OIL CHANGES, HYDRAULIC SYSTEM DRAIN DOWN, SOLVENT AND DE-GREASING CLEANING OPERATIONS AND OTHER ACTIVITIES WHICH MAY RESULT IN DISCHARGE OR SPILLAGE OF POLLUTANTS TO THE GROUND OR INTO STORMWATER RUNOFF, MUST BE CONDUCTED UNDER COVER AND ON IMPERVIOUS SURFACES. THESE SURFACES SHALL BE CLEANED IMMEDIATELY FOLLOWING ANY DISCHARGE OR SPILLAGE INCIDENT. WHEEL WASH, OR TIRE BATH WASTEWATER, SHALL NOT BE DISCHARGED TO THE STORM DRAIN, OR ON-SITE STORMWATER TREATMENT SYSTEM.
10. ALL TEMPORARY AND PERMANENT EROSION AND SEDIMENT CONTROL FACILITIES SHALL BE MAINTAINED AND REPAIRED AS NEEDED TO ASSURE CONTINUED PERFORMANCE OF THEIR INTENDED FUNCTION.

CONSTRUCTION SEQUENCE

1. ATTEND PRE-CONSTRUCTION MEETING
2. FLAG CLEARING LIMITS
3. INSTALL ORANGE TREE BARRIER FENCING
4. INSPECTION BY CITY OF MERCER ISLAND INSPECTOR
5. EROSION CONTROL DEVICES AND RESOURCES TO COVER ALL SOIL, IN CASE OF EROSION RISK, ARE TO BE ON THE SITE AT ALL TIMES
6. CONSTRUCT TEMPORARY GRAVEL CONSTRUCTION ENTRANCE
7. CLEAR AND GRUB WITHIN CLEARING LIMITS
8. INSTALL DETENTION TANK FOR TEMPORARY CONSTRUCTION DRAINAGE
9. SITE GRADING
10. INSTALL UNDERGROUND UTILITIES
11. TEMPORARY COVER OR APPLY PERMANENT VEGETATION, WHICH EVER IS APPROPRIATE
12. FINISH GRADE
13. APPLY PERMANENT VEGETATION AND MULCH ALL DISTURBED AREAS
14. FLUSH DETENTION TANK SYSTEM BEFORE PERMANANT USE
15. CLEAN-UP THE SITE. TEMPORARY EROSION CONTROL DEVICES MAY BE REMOVED WITHIN 30 DAYS AFTER FINAL SITE STABILIZATION OR AFTER THEY ARE NO LONGER NECESSARY

Know what's **below.** **Call** before you dig.

APPROVED: ______________________________
CITY OF MERCER ISLAND DEVELOPMENT SERVICES GROUP   Date

NICOLE E. MECUM — STATE OF WASHINGTON — 39897 — REGISTERED PROFESSIONAL ENGINEER — 10-24-2022

DWN BY	CHKD BY	DATE	NOTES
KAL	KAL	3-30-21	SUBMITTED TO CLIENT
KAL	KAL	5-25-21	REVISED PER CITY COMMENTS
JAT	NEM	4-28-22	REVISED PER CITY COMMENTS
TLK	NEM	10-24-22	REVISED PER CITY COMMENTS

G2 CIVIL
1700 NW GILMAN BLVD, STE 200
ISSAQUAH, WA 98027
PHONE: (425) 821-5038

T.E.S.C. PLAN
LOT 1 - SFR (93RD AVE SE)

PREMIUM HOMES OF MERCER ISLAND LLC
PO BOX 1639
MERCER ISLAND, WA 98040
(206) 724-1072

JOB No.

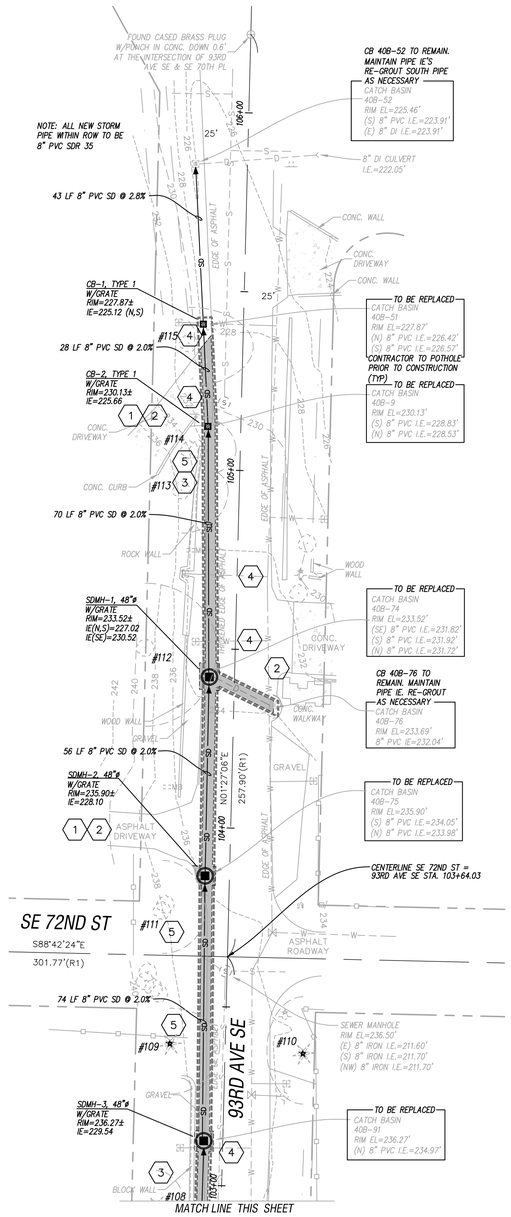

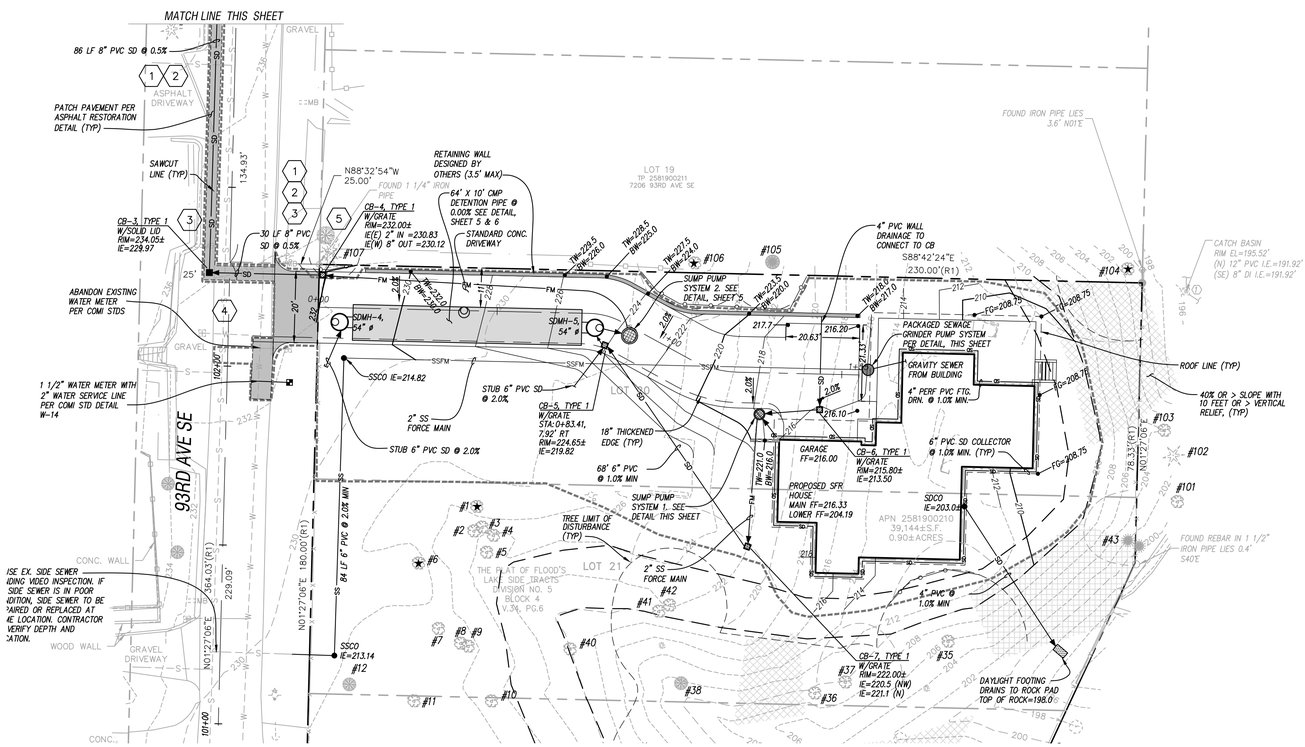

OFFSITE RESTORATION NOTES

1. PRIVATE DRIVEWAY TO BE RESTORED TO PRE-EXISTING CONDITION OR BETTER.
2. 48 HOUR ADVANCED NOTICE TO BE PROVIDED TO PROPERTY OWNER PRIOR TO BEGINNING WORK
3. PORTION OF EXISTING ROCK, BLOCK, AND/OR LANDSCAPE WALL MAY REQUIRE REMOVAL TO FACILITATE CONSTRUCTION. ANY DISTRURBANCE TO WALL SHALL BE RESTORED TO PRE-EXISTING CONDITION UPON COMPLETION OF CONSTRUCTION.
4. WATER SERVICES AND/OR ANY UTILITIES CROSSING PIPE ALINGMENT TO BE POTHOLED PRIOR TO CONSTRUCTION. CONTRACTOR TO PROTECT AND MAINTAIN EXISTING WATER SERVICE DURING INSTALLATION OF NEW UTILITIES.
5. EXISTING TREES TO BE EVALUATED BY A CERTIFIED ARBORIST PRIOR TO CONSTRUCTION. ADDITIONAL PRECAUTIONARY MEASURES MAY BE REQUIRED DURING CONSTRUCTION.

NOTE

THE EXISTING SEWER & WATER SERVICES (ALONG WITH DRY UTILITIES) WITHIN THE PROPOSED STORM DRAINAGE EXTENSION WILL NEED TO BE LOCATED AND POTHOLED PRIOR TO CONSTRUCTION. THE CONTRACTOR WILL NEED TO COORDINATE WITH THE CITY & INSPECTOR REGARDING ANY ADDITIONAL PERMITING REQUIREMENTS. THE UPDATE SHALL BE SENT TO THE ENGINEER TO VERIFY NO CONFLICTS EXIST.

GRAPHIC SCALE

20 0 10 20

SCALE: 1" = 20'

Know what's **below.** **Call** before you dig.

APPROVED: _____ CITY OF MERCER ISLAND DEVELOPMENT SERVICES GROUP Date

DWN BY	CHKD BY	DATE	NOTES
KAL	KAL	3-30-21	SUBMITTED TO CLIENT
KAL	KAL	5-25-21	REVISED PER CITY COMMENTS
JAT	NEM	4-28-22	REVISED PER CITY COMMENTS
TLK	NEM	10-24-22	REVISED PER CITY COMMENTS

CONCEPT-01

G2 CIVIL
1700 NW GILMAN BLVD, STE 200
ISSAQUAH, WA 98027
PHONE: (425) 821-5038

TREE RETENTION PLAN
LOT 1 - SFR (93RD AVE SE)

PREMIUM HOMES OF MERCER ISLAND, LLC
PO BOX 1639
MERCER ISLAND, WA. 98040
(206) 724-1072

SHEET
3 of 6

JOB No.

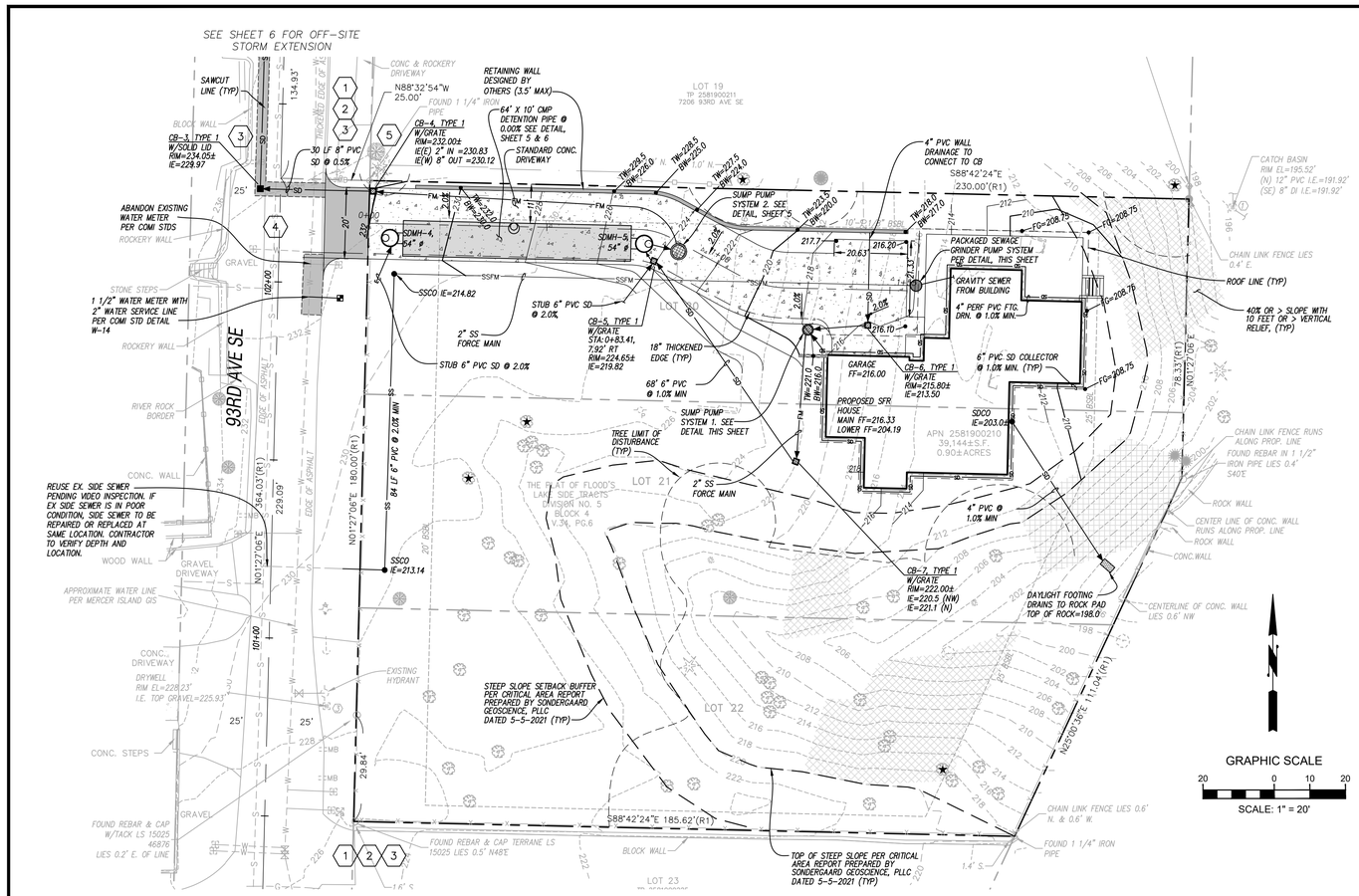

SITE IMPROVEMENT NOTES

1. PROOF OF LIABILITY INSURANCE SHALL BE SUBMITTED TO THE CITY PRIOR TO THE PRE-CONSTRUCTION MEETING.
2. THESE PLANS ARE APPROVED FOR GRADING, DRAINAGE, AND UTILITY IMPROVEMENTS ONLY. PLANS FOR STRUCTURES REQUIRE A SEPARATE REVIEW AND APPROVAL.
3. RETAINING WALLS GREATER THAN FOUR (4) FEET IN HEIGHT REQUIRE A SEPARATE BUILDING PERMIT.
4. FILL MATERIAL PLACED UNDER BUILDING FOUNDATIONS OR PAVEMENT SHALL BE CRUSHED BASE ROCK OR COMPACTED STRUCTURAL FILL IN ACCORDANCE WITH CITY AND WSDOT STANDARD SPECIFICATIONS.
5. THIS PLAN DOES NOT NECESSARILY SHOW THE LOCATION OF ALL EXISTING UTILITIES. IT IS THE RESPONSIBILITY OF THE CONTRACTOR TO LOCATE ALL EXISTING UTILITIES PRIOR TO EXCAVATION.
6. THE CONTRACTOR SHALL EXPOSE ALL EXISTING PIPING THAT WILL BE CONNECTED TO WITH NEW PIPING. DEPTH, LOCATION, AND CONDITION SHALL BE RELAYED TO THE ENGINEER IF CONDITIONS VARY SIGNIFICANTLY FROM WHAT IS DETAILED OR ANTICIPATED.
7. ALL WORK SHALL BE PERFORMED IN STRICT ACCORDANCE TO DETAILS AND SPECIFICATIONS OF CITY STANDARDS. ALL CONSTRUCTION DEBRIS GENERATED DURING CONSTRUCTION TO BE REMOVED & DISPOSED OF AT AN APPROVED LOCATION OFF SITE.
8. ALL CUT MATERIAL GENERATED DURING THE PROJECT THAT IS NOT ACCEPTABLE FOR USE AS COMPACTED FILL MATERIAL AT ANOTHER LOCATION ON-SITE MUST BE HAULED TO AN APPROVED LOCATION OFF-SITE.

GRADING NOTES

1. ALL CUT MATERIAL GENERATED DURING THE PROJECT THAT IS NOT ACCEPTABLE FOR USE AS COMPACTED FILL MATERIAL AT ANOTHER LOCATION ON-SITE MUST BE HAULED TO AN APPROVED LOCATION OFF-SITE.
2. THE ON-SITE TOPOGRAPHICAL MAPPING WAS PROVIDED BY GEO DIMENSIONS, INC.
3. ALL TEMPORARY OR PERMANENT SLOPES SHALL NOT EXCEED 2H:1V UNLESS APPROVED BY A GEOTECHNICAL ENGINEER.
4. FILL MATERIAL PLACED UNDER BUILDING FOUNDATIONS OR PAVEMENT SHALL BE CRUSHED BASE ROCK OR COMPACTED STRUCTURAL FILL IN ACCORDANCE TO WSDOT STANDARD SPECIFICATIONS.
5. ROCKERY AND/OR RETAINING WALLS GREATER THAN FOUR (4) FEET IN HEIGHT REQUIRES A BUILDING PERMIT.
6. IT WILL BE THE PERMITEE'S RESPONSIBILITY TO SUCCESSFULLY CAP AND ABANDON ALL EXISTING UTILITIES WITHIN THE DEVELOPMENT IN ACCORDANCE TO THE GOVERNING UTILITY AGENCY.

ARCHITECTURAL, STRUCTURAL & GEOTECHNICAL NOTES

1. THESE PLANS ARE APPROVED FOR STANDARD ROAD AND DRAINAGE IMPROVEMENTS ONLY. PLANS FOR STRUCTURES SUCH AS RETAINING WALLS HIGHER THAN 4' REQUIRE A SEPARATE REVIEW AND APPROVAL PRIOR TO CONSTRUCTION.
2. SPECIAL INSPECTIONS FOR GEOTECHNICAL AND/OR STRUCTURAL ASPECTS OF OF THE PROJECT MAY BE REQUIRED DURING VARIOUS STAGES OF THE PROJECT. CONTRACTOR TO BE RESPONSIBLE FOR COORDINATION AND OBTAINING INSPECTIONS WHEN AND WHERE NECESSARY.
3. SEE ARCHITECTURAL PLANS FOR BUILDING SECTIONS AND ALL LOCATIONAL/DIMENSIONAL ASPECTS OF BUILDINGS.
4. SEE ARCHITECTURAL AND STRUCTURAL PLANS FOR ALL BUILDING AND RETAINING WALL DETAILS.
5. COORDINATE ALL SITE CIVIL CONSTRUCTION WITH ARCHITECTURAL, STRUCTURAL, MECHANICAL/PLUMBING AND LANDSCAPE PLANS IN ACCORDANCE WITH GEOTECHNICAL RECOMMENDATIONS.

DRAINAGE GENERAL NOTES

1. A PRE-CONSTRUCTION CONFERENCE SHALL BE HELD PRIOR TO THE START OF CONSTRUCTION. THE CONTRACTOR SHALL BE RESPONSIBLE FOR SECURING ALL NECESSARY PERMITS PRIOR TO CONSTRUCTION.
2. BEFORE ANY CONSTRUCTION MAY OCCUR, THE CONTRACTOR SHALL HAVE PLANS WHICH HAVE BEEN SIGNED AND APPROVED BY THE CITY OF MERCER ISLAND PUBLIC WORKS DEPARTMENT, OBTAINED ALL CITY, COUNTY, STATE, FEDERAL AND OTHER REQUIRED PERMITS, AND HAVE POSTED ALL REQUIRED BONDS.
3. ALL STORM DRAINAGE IMPROVEMENTS SHALL BE DESIGNED AND CONSTRUCTED IN ACCORDANCE WITH THE LATEST EDITION OF THE CITY OF MERCER ISLAND PUBLIC WORKS PRE-APPROVED PLANS AND POLICIES AND THE STANDARD SPECIFICATIONS FOR ROAD, BRIDGE AND MUNICIPAL CONSTRUCTION, PREPARED BY WSDOT AND THE AMERICAN PUBLIC WORKS ASSOCIATION (APWA).
4. ANY DEVIATION FROM THE APPROVED PLANS WILL REQUIRE WRITTEN APPROVAL. ALL CHANGES SHALL BE SUBMITTED TO THE CITY.
5. A COPY OF THE APPROVED STORM WATER PLANS MUST BE ON THE JOB SITE WHENEVER CONSTRUCTION IS IN PROGRESS.
6. ALL DISTURBED AREAS SHALL BE SEEDED AND MULCHED OR SIMILARLY STABILIZED TO THE SATISFACTION OF THE CITY OF MERCER ISLAND DEPARTMENT OF PUBLIC WORKS FOR THE PREVENTION OF ON-SITE EROSION AFTER THE COMPLETION OF CONSTRUCTION.
7. MINIMUM COVER OVER STORM DRAINAGE PIPES IN ROW OR VEHICULAR PATH SHALL BE 18 INCHES, UNLESS OTHER DESIGN IS APPROVED.
8. CONSTRUCTION OF DEWATERING (GROUNDWATER) SYSTEMS SHALL BE IN ACCORDANCE WITH THE APWA STANDARD SPECIFICATIONS.
9. ALL TRENCH BACKFILL SHALL BE COMPACTED TO 95 PERCENT DENSITY IN ROADWAYS, ROADWAY SHOULDERS, ROADWAY PRISM AND DRIVEWAYS, AND 85 PERCENT DENSITY IN UNPAVED AREAS. ALL PIPE ZONE COMPACTION SHALL BE 95 PERCENT.
10. THE CONTRACTOR SHALL BE RESPONSIBLE FOR PROVIDING ADEQUATE SAFEGUARDS, SAFETY DEVICES, PROTECTIVE EQUIPMENT, CONFINED SPACE PROTECTION, FLAGGERS, AND ANY OTHER NEEDED ACTIONS TO PROTECT THE LIFE, HEALTH, AND SAFETY OF THE PUBLIC, AND TO PROTECT PROPERTY IN CONNECTION WITH THE PERFORMANCE OF WORK COVERED BY THE CONTRACT.
11. APPROXIMATE LOCATIONS OF EXISTING UTILITIES HAVE BEEN OBTAINED FROM AVAILABLE RECORDS AND ARE SHOWN FOR CONVENIENCE. THE CONTRACTOR SHALL BE RESPONSIBLE FOR VERIFICATION OF EXISTING UTILITY LOCATIONS WHETHER OR NOT THESE UTILITIES ARE SHOWN ON THE PLANS. THE CONTRACTOR SHALL EXERCISE ALL CARE TO AVOID DAMAGE TO ANY UTILITY. IF CONFLICTS WITH EXISTING UTILITIES ARISE DURING CONSTRUCTION, THE CONTRACTOR SHALL NOTIFY THE CITY CONSTRUCTION INSPECTOR AND ANY CHANGES REQUIRED SHALL BE APPROVED BY THE DEVELOPMENT ENGINEER PRIOR TO COMMENCEMENT OF RELATED CONSTRUCTION ON THE PROJECT.
12. THE UNDERGROUND UTILITY LOCATION SERVICE SHALL BE CONTACTED FOR FIELD LOCATION OF EXISTING UTILITIES PRIOR TO ANY CONSTRUCTION. THE OWNER OR HIS REPRESENTATIVE SHALL BE CONTACTED IF A UTILITY CONFLICT EXISTS. FOR UTILITY LOCATION IN KING COUNTY, CALL 811. THE CONTRACTOR IS RESPONSIBLE TO ENSURE THAT UTILITY LOCATES ARE MAINTAINED THROUGHOUT THE LIFE OF THE PROJECT.
13. OPEN CUT ROAD CROSSINGS FOR UTILITY TRENCHES ON EXISTING TRAVELED ROADWAY SHALL BE BACKFILLED ONLY WITH 5/8" MINUS CRUSHED ROCK AND MECHANICALLY COMPACTED (UNLESS OTHERWISE APPROVED BY THE CITY). CUTS INTO THE EXISTING ASPHALT SHALL BE NEAT LINE CUT WITH SAW OR JACKHAMMER IN A CONTINUOUS LINE. A TEMPORARY COLD MIX PATCH MUST BE PLACED IMMEDIATELY AFTER BACKFILL AND COMPACTION. A PERMANENT HOT MIX PATCH SHALL BE PLACED WITHIN 30 DAYS AND SHALL BE A MINIMUM OF 1" THICKER THAN THE ORIGINAL ASPHALT WITH A MINIMUM THICKNESS OF 2".
14. ALL DAMAGES INCURRED TO PUBLIC AND/OR PRIVATE PROPERTY BY THE CONTRACTOR DURING THE COURSE OF CONSTRUCTION SHALL BE PROMPTLY REPAIRED TO THE SATISFACTION OF THE CITY CONSTRUCTION INSPECTOR BEFORE PROJECT APPROVAL AND/OR THE RELEASE OF THE PROJECT'S PERFORMANCE BOND.
15. GROUT ALL SEAMS AND OPENINGS IN ALL INLETS, CATCH BASINS, AND MANHOLES.

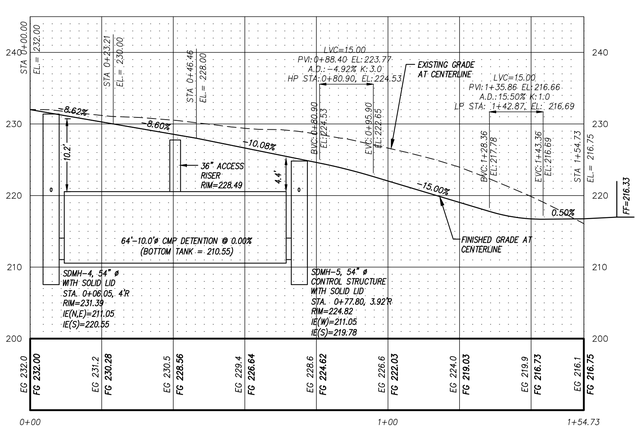

DRIVEWAY C/L PROFILE

1"=20' HORIZ, 1"=10' VERT.

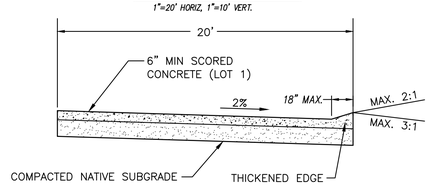

DRIVEWAY SECTION

N.T.S.

STORMWATER PUMP SYSTEM NOTES

1) THE PUMP SYSTEM MUST BE PRIVATELY OWNED AND MAINTAINED. THE PUMP SYSTEM SHALL HAVE A DUAL PUMP (ALTERNATING), UNLESS OTHERWISE APPROVED.
2) THE PUMP SYSTEM SHALL BE USED TO CONVEY WATER FROM ONE LOCATION OR ELEVATION TO ANOTHER WITHIN THE PROJECT SITE, PRIOR TO GRAVITY DISCHARGE TO THE PUBLIC STORM DRAINAGE SYSTEM.
3) THE PUMP SYSTEM MUST BE CONNECTED TO AN EMERGENCY BACK-UP GENERATOR.
4) ALL PUMPS SHALL BE EQUIPPED WITH AN EXTERNAL VISUAL AND AUDIBLE ALARM SYSTEM.
5) THE PUMP SYSTEM SHALL NOT VIOLATE ANY CITY ORDINANCES OR CODES.
6) NO FORCED MAIN SYSTEM SHALL BE DIRECTLY CONNECTED TO THE CITY'S STORM CONVEYANCE. ALL FORCED MAIN FROM PUMP SYSTEMS SHALL CONNECT TO A CB OR YARD DRAIN ON SITE AND GRAVITY TO THE STORM SYSTEM IN THE RIGHT-OF-WAY.

PUMP CONTROL SYSTEM:
PROVIDE A SJE-RHOMBUS 1221 SINGLE PHASE DUPLEX ALTERNATING PUMP CONTROL PANEL WITH OVERRIDE CIRCUIT BREAKER. PUMPS TO OPERATE AS A STANDARD LEAD, LAG, ALTERNATING STYLE OF SYSTEM. PANEL TO BE MOUNTED INSIDE GARAGE. PUMPS, PUMP BASIN, AND CONTROL PANEL ARE AVAILABLE AT HD FOWLER. PH. (425) 746-8400

PROVIDE POWER CONNECTION AND CONTROL SWITCH WIRING TO CONTROL BOX IN GARAGE VIA APPROPRIATE CIRCUIT BREAKER, CONDUIT AND JUNCTION BOX FROM SUMP STRUCTURE. CONSTRUCT AND INSTALL PER ELECTRIC CODES AND MFR. REQ'TS

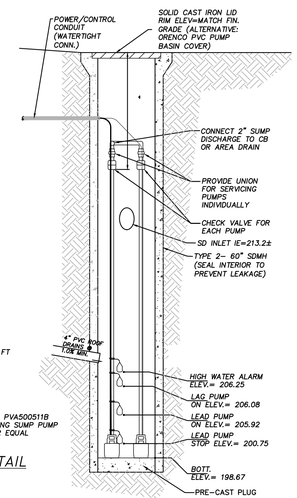

DESIGN PARAMETERS:
TOTAL DYNAMIC HEAD=25.3 FT
FLOW RATE=51.2 GPM

ORENCO PVA500511B ALTERNATING SUMP PUMP OR EQUAL

SUMP PUMP SYSTEM 1 DETAIL

N.T.S.

PUMP MANUFACTURER TO CONFIRM PUMP CAN HANDLE DESIGN PARAMETERS PRIOR TO PLACING ORDER.

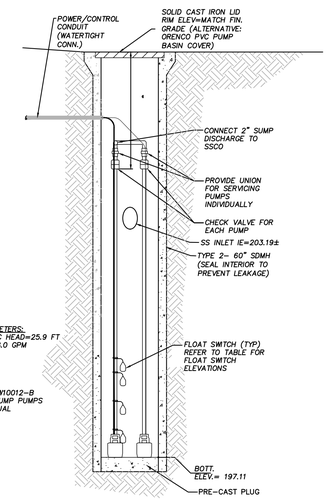

DESIGN PARAMETERS:
TOTAL DYNAMIC HEAD=25.9 FT
FLOW RATE=48.0 GPM

ORENCO PFSW10012-B ALTERNATING SUMP PUMPS OR EQUAL

SEWER SUMP PUMP SYSTEM DETAIL

N.T.S.

PUMP MANUFACTURER TO CONFIRM PUMP CAN HANDLE DESIGN PARAMETERS PRIOR TO PLACING ORDER.

PFSW10012-B-FLOAT SWITCH ELEVATION TABLE

HIGH WATER ALARM	203.19
LAG PUMP ON	203.02
LEAD PUMP ON	202.86
PUMPS OFF	199.19

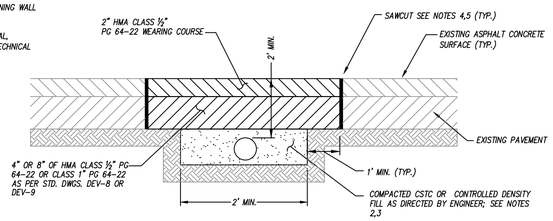

NOTES

1. ASPHALT CONCRETE MIX SHALL BE HMA CLASS ½" OR CLASS 1" PG 64-22.
2. ALL TRENCH BACKFILL SHALL BE CSTC OR CONTROLLED DENSITY FILL.
3. CONTROLLED DENSITY FILL SHALL MEET WSDOT STANDARDS AS STATED IN 2-09.3(1)E OF THE STANDARD SPECIFICATIONS FOR ROAD, BRIDGE AND MUNICIPAL CONSTRUCTION MANUAL M41-10, CURRENT EDITION.
4. ALL SAW CUTS SHALL BE VERTICAL AND IN STRAIGHT LINES UNLESS OTHERWISE DIRECTED BY ENGINEER.
5. TACK ASPHALT FACES OF SAW CUTS AND SEAL SAW CUTS WITH PG 64-22 OIL.
6. HOT MIX ASPHALT SHALL BE A MINIMUM OF 6 INCHES THICK

ASPHALT PAVEMENT SAWCUT & RESTORATION

N.T.S.

OFFSITE RESTORATION NOTES

1. PRIVATE DRIVEWAY TO BE RESTORED TO PRE-EXISTING CONDITION OR BETTER.
2. 48 HOUR ADVANCED NOTICE TO BE PROVIDED TO PROPERTY OWNER PRIOR TO BEGINNING WORK
3. PORTION OF EXISTING ROCK, BLOCK, AND/OR LANDSCAPE WALL MAY REQUIRE REMOVAL TO FACILITATE CONSTRUCTION. ANY DISTRURBANCE TO WALL SHALL BE RESTORED TO PRE-EXISTING CONDITION UPON COMPLETION OF CONSTRUCTION.
4. WATER SERVICES AND/OR ANY UTILITIES CROSSING PIPE ALINGMENT TO BE POTHOLED PRIOR TO CONSTRUCTION. CONTRACTOR TO PROTECT AND MAINTAIN EXISTING WATER SERVICE DURING INSTALLATION OF NEW UTILITIES.
5. EXISTING TREES TO BE EVALUATED BY A CERTIFIED ARBORIST PRIOR TO CONSTRUCTION. ADDITIONAL PRECAUTIONARY MEASURES MAY BE REQUIRED DURING CONSTRUCTION.

811 Know what's below. Call before you dig.

APPROVED:
CITY OF MERCER ISLAND DEVELOPMENT SERVICES GROUP Date

DWN BY	CHKD BY	DATE	NOTES
KAL	KAL	3-30-21	SUBMITTED TO CLIENT
KAL	KAL	5-25-21	REVISED PER CITY COMMENTS
JAT	NEM	4-28-22	REVISED PER CITY COMMENTS
TLK	NEM	10-24-22	REVISED PER CITY COMMENTS

G2 CIVIL
1700 NW GILMAN BLVD, STE 200
ISSAQUAH, WA 98027
PHONE: (425) 821-5038

SITE IMPROVEMENT PLAN
LOT 1 - SFR (93RD AVE SE)

PREMIUM HOMES OF MERCER ISLAND LLC
PO BOX 1639
MERCER ISLAND, WA 98040
(206) 724-1072

SHEET
4 of 6

JOB No.

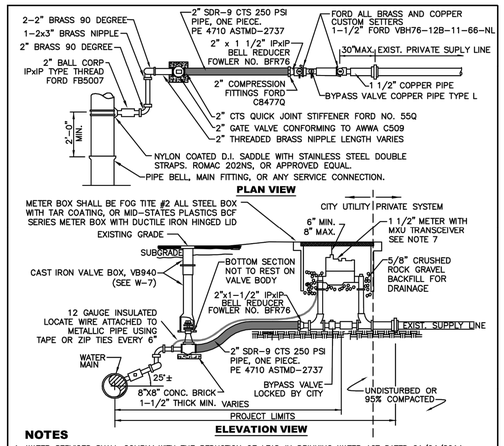

NOTES

1. WATER SERVICES SHALL COMPLY WITH THE REDUCTION OF LEAD IN DRINKING WATER ACT DATED 01/04/2014.
2. MINIMUM DISTANCE BETWEEN CORP STOPS SHALL BE 18' MINIMUM DISTANCE BETWEEN TAPS, BETWEEN CORP STOP AND PIPE ENDS SHALL BE 24', ALL HORIZONALLY STAGGERED.
3. PLASTIC METER BOXES SHALL NOT BE INSTALLED WITHIN ROADWAY, SIDEWALK, OR DRIVEWAYS.
4. UPON CITY ENGINEER'S APPROVAL, METER BOXES ARE ALLOWED TO BE INSTALLED IN PORTLAND CEMENT CONCRETE PAVEMENT OR SIDEWALK.
5. WHEN CONNECTING TO EXISTING PRIVATE SUPPLY LINE CONTAINING FERROUS METAL, PROVIDE INSULATING COUPLING (DB SERIES WITH C21 SERIES ADAPTERS) AND PROVIDE REDUCER AS NECESSARY TO MATCH EXISTING PRIVATE SUPPLY LINE DIAMETER.
6. SERVICE LINE SHALL BE PERPENDICULAR TO THE WATER MAIN AND STRAIGHT TO WATER METER, UNLESS OTHERWISE APPROVED BY CITY ENGINEER. PROVIDE WINDING SLACK IN THE SERVICE LINE BETWEEN THE MAIN AND WATER METER.
7. WATER METER SUPPLIED BY CITY.
8. ALL FITTINGS TO BE BRASS COMPRESSION TYPE, FORD QUICK JOINT OR EQUAL.
9. NO SERVICE CONNECTIONS BETWEEN BLOW–OFF AND END OF MAIN.

CITY OF MERCER ISLAND
STANDARD DETAILS
WATER
1–1/2" WATER METER INSTALLATION

02–05–2021	NO SCALE	W-14

REV DATE | APPROVED

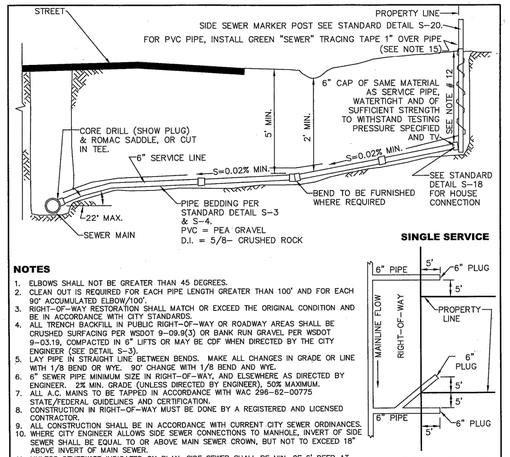

NOTES

1. ELBOWS SHALL NOT BE GREATER THAN 45 DEGREES.
2. CLEAN OUT IS REQUIRED FOR EACH PIPE LENGTH GREATER THAN 100' AND FOR EACH 90° ACCUMULATED ELBOW/100'.
3. RIGHT–OF–WAY RESTORATION SHALL MATCH OR EXCEED THE ORIGINAL CONDITION AND BE IN ACCORDANCE WITH CITY STANDARDS.
4. ALL TRENCH BACKFILL IN PUBLIC RIGHT–OF–WAY OR ROADWAY AREAS SHALL BE CRUSHED SURFACING PER WSDOT 9–09.9(3) OR BANK RUN GRAVEL PER WSDOT 9–03.19, COMPACTED IN 6" LIFTS OR MAY BE CDF WHEN DIRECTED BY THE CITY ENGINEER (SEE DETAIL S–3).
5. LAY PIPE IN STRAIGHT LINE BETWEEN BENDS. MAKE ALL CHANGES IN GRADE OR LINE WITH 1/8 BEND OR WYE. 90° CHANGE WITH 1/8 BEND AND WYE.
6. 6" SEWER PIPE MINIMUM SIZE IN RIGHT–OF–WAY, AND ELSEWHERE AS DIRECTED BY ENGINEER. 2% MIN. GRADE (UNLESS DIRECTED BY ENGINEER). 50% MAXIMUM.
7. ALL A.C. MAINS TO BE TAPPED IN ACCORDANCE WITH WAC 296–82–00775 STATE/FEDERAL GUIDELINES AND CERTIFICATION.
8. CONSTRUCTION IN RIGHT–OF–WAY MUST BE DONE BY A REGISTERED AND LICENSED CONTRACTOR.
9. ALL CONSTRUCTION SHALL BE IN ACCORDANCE WITH CURRENT CITY SEWER ORDINANCES.
10. WHERE CITY ENGINEER ALLOWS SIDE SEWER CONNECTIONS TO MANHOLE, INVERT OF SIDE SEWER SHALL BE EQUAL TO OR ABOVE MAIN SEWER CROWN, BUT NOT TO EXCEED 18" ABOVE INVERT OF MAIN SEWER.
11. UNLESS OTHERWISE INDICATED ON PLAN, SIDE SEWER SHALL BE MIN. OF 6' DEEP AT PROPERTY LINE, OR 5' LOWER THAN THE LOWEST ELEVATION, WHICH EVER IS LOWER.
12. ALL PIPE MATERIALS NOT TO STANDARDS WILL BE ABANDONED AND REPLACED WITH DUCTILE IRON OR PVC PIPE OF THE SAME SIZE.
13. IF A BUILDING SEWER IS TO SERVE MORE THAN ONE PROPERTY, BY JOINT AGREEMENT OF THE OWNERS, AN APPROVED EASEMENT INSURING THAT ALL PROPERTIES INVOLVED SHALL HAVE PERPETUAL USE OF THE SIDE SEWER, HAVING PROVISIONS FOR OPERATION, MAINTENANCE, RECONSTRUCTION AND FOR ACCESS FOR REPAIR PURPOSES, SHALL BE SIGNED BY THE OWNERS. THIS EASEMENT SHALL BE RECORDED WITH THE COUNTY AUDITOR. A SIX INCH (MINIMUM) DIAMETER PIPE SHALL BE USED FOR THE COMMON LINE AND A SIX INCH CLEANOUT EXTENDING TO WITHIN 12 INCHES OF THE GROUND SURFACE SHALL BE PROVIDED AT THE WYE WHERE THE UPPER GRADE CONNECTIONS ARE MADE. BACKWATER VALVES SHALL BE INSTALLED ON SERVICE LINES UPSTREAM OF THE CONNECTION TO THE SHARED SIDE SEWER.
14. THE CITY ENGINEER MAY REQUIRE BACKWATER VALVES ON SIDE SEWERS WHEN DEEMED NECESSARY. THE EFFECTIVE OPERATION AND MAINTENANCE OF ANY BACKWATER VALVE SHALL BE THE RESPONSIBILITY OF THE OWNER OF THE SIDE SEWER.
15. UTILITY PIPE TRACER TAPE SHALL BE DETECTABLE BELOW GROUND SURFACE, COLOR CODED, WITH UTILITY NAME PRINTED ON TAPE. CONDUCTIVE WARNING TAPE REQUIRED OVER ALL WATER PIPE. TAPE SHALL BE MANUFACTURER'S STANDARD PERMANENT, BRIGHT–COLORED, CONTINUOUS PRINTED PLASTIC TAPE, ALUMINUM BACKED, INTENDED FOR DIRECT–BURIAL SERVICE. TAPE SHALL BE NOT LESS THAN 6" WIDE X 4 MILS THICK.

CITY OF MERCER ISLAND
STANDARD DETAILS
SEWER
SIDE SEWER CONNECTION AND STUB

6–5–2009	NO SCALE	S-17

REV DATE | APPROVED

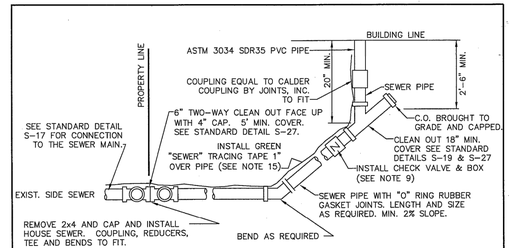

BUILDING CONNECTION

NOTES

1. ELBOWS SHALL NOT BE GREATER THAN 45 DEGREES.
2. CLEAN OUT IS REQUIRED FOR EACH PIPE LENGTH GREATER THAN 100' AND FOR EACH 90° ACCUMULATED ELBOW/100'.
3. ALL HOUSE PLUMBING OUTLETS MUST BE CONNECTED TO THE SEWER. NO DOWN SPOUTS OR STORM DRAINAGE MAY BE CONNECTED TO THE SEWER SYSTEM.
4. 18" MINIMUM COVERAGE OVER PIPE.
5. LAY PIPE IN STRAIGHT LINE BETWEEN BENDS. MAKE ALL CHANGES IN GRADE OR LINE WITH 1/8 BEND OR WYE. 90° CHANGE WITH 1/8 BEND AND WYE.
6. 4" SEWER PIPE MINIMUM SIZE ON PROPERTY. 2% MINIMUM GRADE.
7. ALL CONSTRUCTION SHALL BE IN ACCORDANCE WITH CURRENT SEWER ORDINANCES.
8. ALL CONSTRUCTION REQUIRES A PLAN SHOWING PROPERTY AND DIMENSIONS AND COMPLETION OF SIDE SEWER APPLICATION AND MAINTENANCE AGREEMENT, AS NEEDED.
9. BACK WATER VALVE (CHECK VALVE) IS REQUIRED:
   A. IF CONNECTED TO A SHARED SIDE SEWER.
   B. IF CONNECTION AT HOUSE IS LOWER THAN BOTH UPSTREAM AND DOWNSTREAM MANHOLE.
   C. SEE S–23 & S–24 FOR LAKE LINE REQUIREMENTS.
10. AS–BUILT DRAWING SHOWING LOCATION OF SIDE SEWER & ALL BENDS, C.O. ETC., IN RELATION TO THE HOUSE IS REQUIRED AFTER INSPECTION & INSTALLATION. SEE STANDARD DETAIL S–38 FOR A TYPICAL "AS BUILT".
11. THE MINIMUM PIPE SIZE FOR SIDE SEWERS SHALL BE:
    6" – WITHIN THE PUBLIC RIGHT–OF–WAY.
    4" – SINGLE FAMILY RESIDENCES.
    6" – 2 TO 6 SINGLE FAMILY RESIDENCES.
    6" – BUILDINGS OTHER THAN SINGLE FAMILY RESIDENCES.
12. UTILITY PIPE TRACER TAPE SHALL BE DETECTABLE BELOW GROUND SURFACE, COLOR CODED, WITH UTILITY NAME PRINTED ON TAPE. CONDUCTIVE WARNING TAPE REQUIRED OVER ALL WATER PIPE. TAPE SHALL BE MANUFACTURER'S STANDARD PERMANENT, BRIGHT–COLORED, CONTINUOUS PRINTED PLASTIC TAPE, ALUMINUM BACKED, INTENDED FOR DIRECT–BURIAL SERVICE. TAPE SHALL BE NOT LESS THAN 6" WIDE X 4 MILS THICK.

CITY OF MERCER ISLAND
STANDARD DETAILS
SEWER
HOUSE SEWER CONNECTION

6–5–2009	NO SCALE	S-18

REV DATE | APPROVED

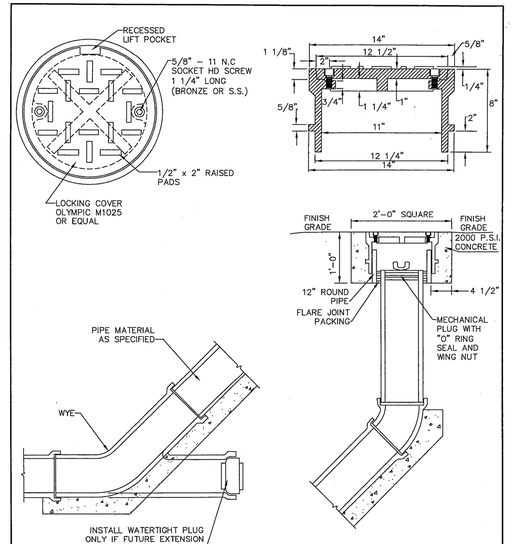

NOTES

1. SEE S–27 FOR INSTALLATION DETAILS.

CITY OF MERCER ISLAND
STANDARD DETAILS
SEWER
CLEAN OUT DETAIL

6–5–2009	NO SCALE	S-19

REV DATE | APPROVED

DWN BY	CHKD BY	DATE	NOTES
KAL	KAL	3–30–21	SUBMITTED TO CLIENT
KAL	KAL	5–25–21	REVISED PER CITY COMMENTS
JAT	NEM	4–28–22	REVISED PER CITY COMMENTS
TLK	NEM	10–24–22	REVISED PER CITY COMMENTS

STORMWATER PUMP SYSTEM NOTES

1) THE PUMP SYSTEM MUST BE PRIVATELY OWNED AND MAINTAINED. THE PUMP SYSTEM SHALL HAVE A DUAL PUMP (ALTERNATING), UNLESS OTHERWISE APPROVED.
2) THE PUMP SYSTEM SHALL BE USED TO CONVEY WATER FROM ONE LOCATION OR ELEVATION TO ANOTHER WITHIN THE PROJECT SITE, PRIOR TO GRAVITY DISCHARGE TO THE PUBLIC STORM DRAINAGE SYSTEM.
3) THE PUMP SYSTEM MUST BE CONNECTED TO AN EMERGENCY BACK–UP GENERATOR.
4) ALL PUMPS SHALL BE EQUIPPED WITH AN EXTERNAL VISUAL AND AUDIBLE ALARM SYSTEM.
5) THE PUMP SYSTEM SHALL NOT VIOLATE ANY CITY ORDINANCES OR CODES.
6) NO FORCED MAIN SYSTEM SHALL BE DIRECTLY CONNECTED TO THE CITY'S STORM CONVEYANCE. ALL FORCED MAIN FROM PUMP SYSTEMS SHALL CONNECT TO A CB OR YARD DRAIN ON SITE AND GRAVITY TO THE STORM SYSTEM IN THE RIGHT–OF–WAY.

PUMP CONTROL SYSTEM:
PROVIDE A S.E–RHOMBUS 1221 SINGLE PHASE DUPLEX ALTERNATING PUMP CONTROL PANEL WITH OVERRIDE CIRCUIT BREAKER. PUMPS TO OPERATE AS A STANDARD LEAD, LAG, ALTERNATING STYLE OF SYSTEM. PANEL TO BE MOUNTED INSIDE GARAGE. PUMPS, PUMP BASIN, AND CONTROL PANEL ARE AVAILABLE AT HD FOWLER. PH. (425) 746–8400

PROVIDE POWER CONNECTION AND CONTROL SWITCH WIRING TO CONTROL BOX IN GARAGE VIA APPROPRIATE CIRCUIT BREAKER, CONDUIT AND JUNCTION BOX FROM SUMP STRUCTURE. CONSTRUCT AND INSTALL PER ELECTRIC CODES AND MFR. REQ'TS

DESIGN PARAMETERS:

ORENCO PVA500511B
TOTAL DYNAMIC HEAD=32.5 FT
FLOW RATE=42.4 GPM

LIBERTY 451
TOTAL DYNAMIC HEAD=28.2 FT
FLOW RATE=8.2 GPM

2–ORENCO PVA500511B ALTERNATING SUMP PUMPS OR EQUAL

1–LIBERTY 451 SUMP PUMP OR EQUIVALENT

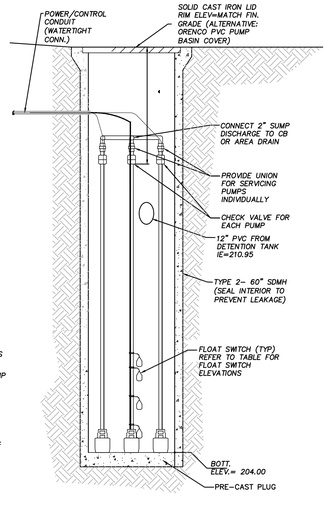

SUMP PUMP SYSTEM 2 DETAIL

N.T.S.

PUMP MANUFACTURER TO CONFIRM PUMP CAN HANDLE DESIGN PARAMETERS PRIOR TO PLACING ORDER.

ORENCO PVA500511B FLOAT SWITCH ELEVATION TABLE	
HIGH WATER ALARM	210.95
LAG PUMP ON	210.78
LEAD PUMP ON	210.62
PUMPS OFF	205.70

LIBERTY 451 FLOAT SWITCH ELEVATION TABLE	
HIGH WATER ALARM	210.95
LAG PUMP ON	209.12
LEAD PUMP ON	208.95
PUMPS OFF	204.12

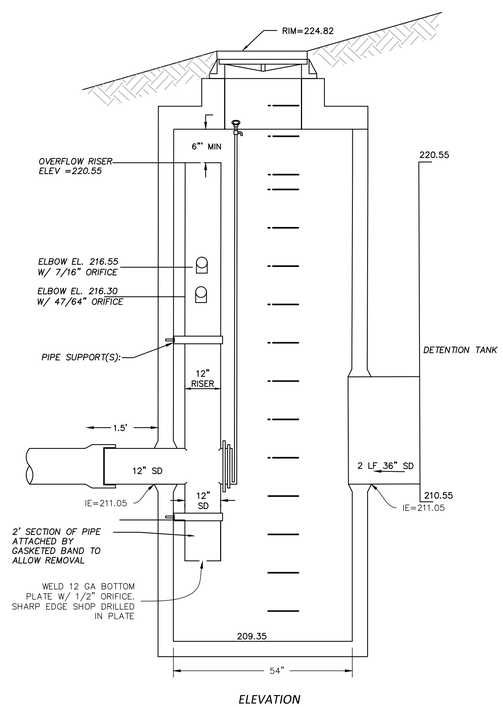

ELEVATION
1"=2'

SDMH #5 TYPE 2-54"
1"=2'

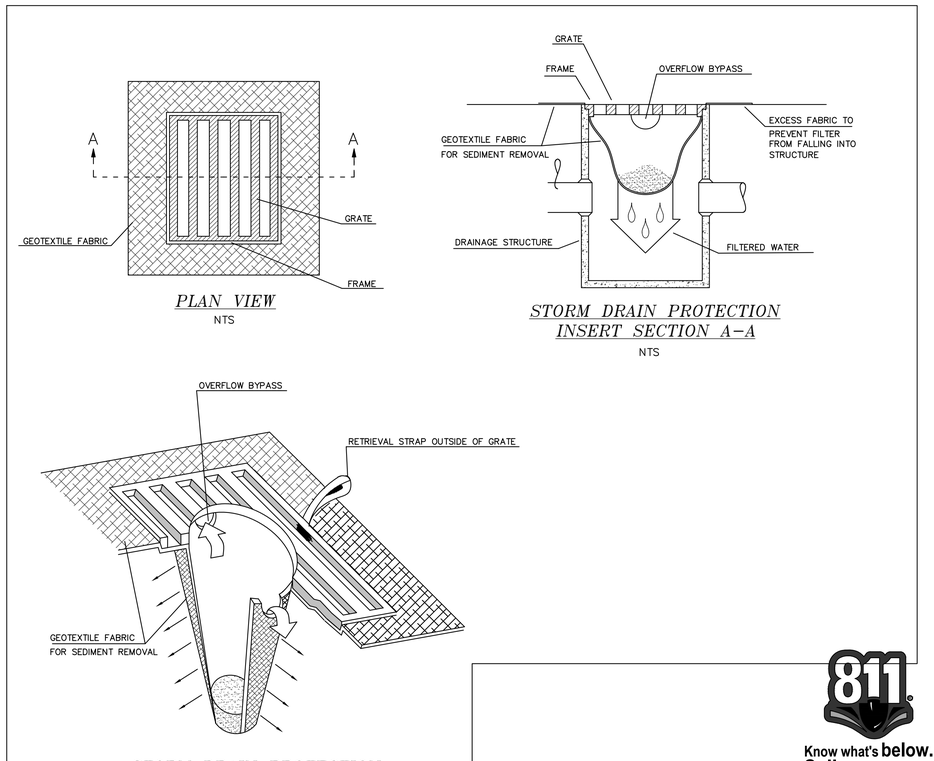

PLAN VIEW
NTS

STORM DRAIN PROTECTION INSERT SECTION A–A
NTS

STORM DRAIN PROTECTION INSERT ISOMETRIC VIEW (TYP.)
NTS

Know what's **below.**
Call before you dig.

APPROVED: _____ _____
CITY OF MERCER ISLAND DEVELOPMENT SERVICES GROUP *Date*

G2 CIVIL
1700 NW GILMAN BLVD, STE 200
ISSAQUAH, WA 98027
PHONE: (425) 821-5038

C.O.M.I. STANDARD DETAILS
LOT 1 - SFR (93RD AVE SE)

PREMIUM HOMES OF MERCER ISLAND LLC
PO BOX 1639
MERCER ISLAND, WA 98040
(206) 724–1072

SHEET
5 of **6**

JOB No.

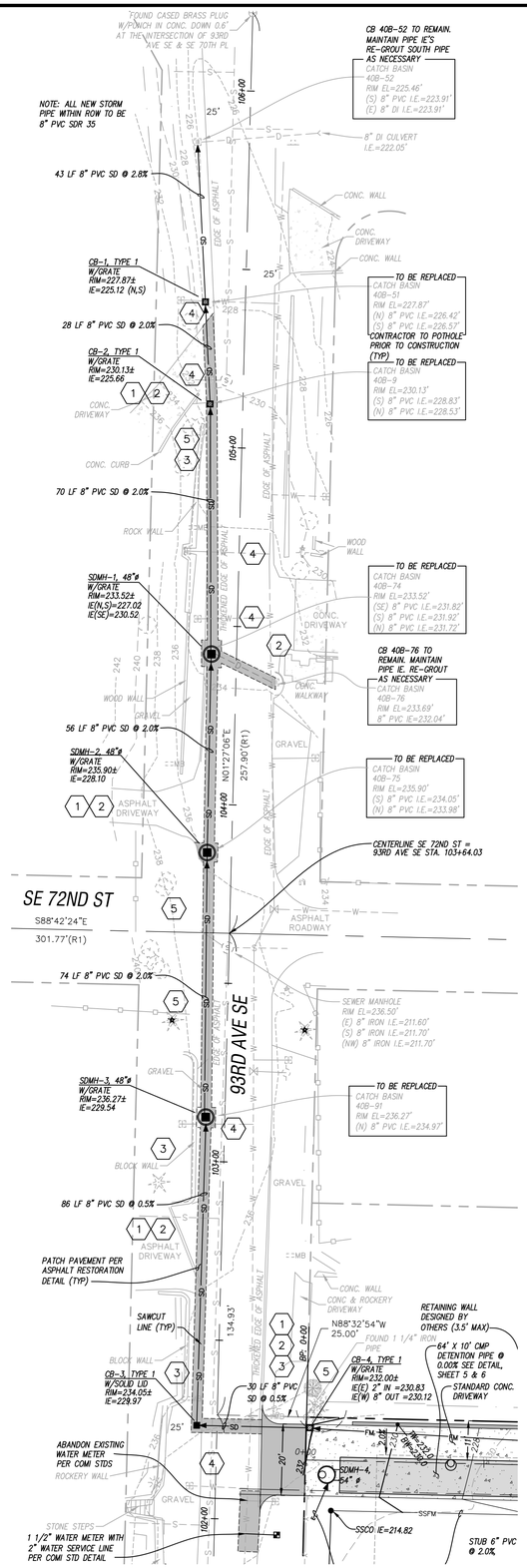

NW 1/4 OF SE 1/4 OF SEC. 30, TWP. 24N., RNG. 5E., W.M.

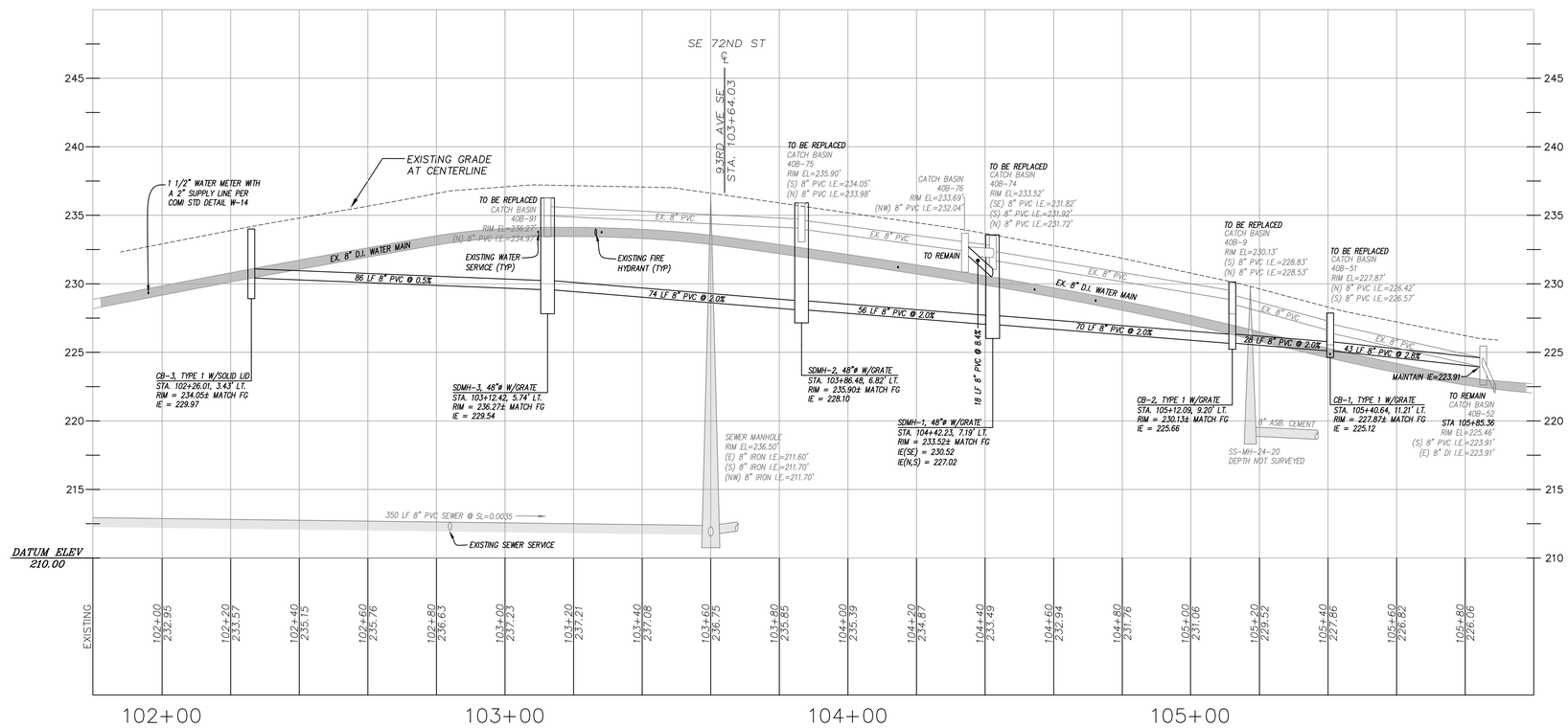

93RD AVE SE C/L PROFILE

H: 1"=20' V: 1"=5'

OFFSITE RESTORATION NOTES

1. PRIVATE DRIVEWAY TO BE RESTORED TO PRE-EXISTING CONDITION OR BETTER.
2. 48 HOUR ADVANCED NOTICE TO BE PROVIDED TO PROPERTY OWNER PRIOR TO BEGINNING WORK
3. PORTION OF EXISTING ROCK, BLOCK, AND/OR LANDSCAPE WALL MAY REQUIRE REMOVAL TO FACILITATE CONSTRUCTION. ANY DISTRURBANCE TO WALL SHALL BE RESTORED TO PRE-EXISTING CONDITION UPON COMPLETION OF CONSTRUCTION.
4. WATER SERVICES AND/OR ANY UTILITIES CROSSING PIPE ALINGMENT TO BE POTHOLED PRIOR TO CONSTRUCTION. CONTRACTOR TO PROTECT AND MAINTAIN EXISTING WATER SERVICE DURING INSTALLATION OF NEW UTILITIES.
5. EXISTING TREES TO BE EVALUATED BY A CERTIFIED ARBORIST PRIOR TO CONSTRUCTION. ADDITIONAL PRECAUTIONARY MEASURES MAY BE REQUIRED DURING CONSTRUCTION.

NOTE

THE EXISTING SEWER & WATER SERVICES (ALONG WITH DRY UTILITIES) WITHIN THE PROPOSED STORM DRAINAGE EXTNENSION WILL NEED TO BE LOCATED AND POTHOLED PRIOR TO CONSTRUCTION. THE CONTRACTOR WILL NEED TO COORDINATE WITH THE CITY & INSPECTOR REGARDING ANY ADDITIONAL PERMITING REQUIREMENTS. THE UPDATE SHALL BE SENT TO THE ENGINEER TO VERIFY NO CONFLICTS EXIST.

GRAPHIC SCALE

20 0 10 20

SCALE: 1" = 20'

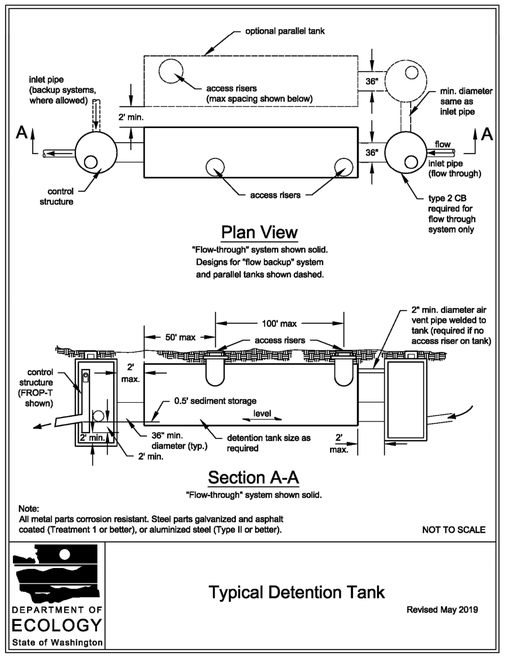

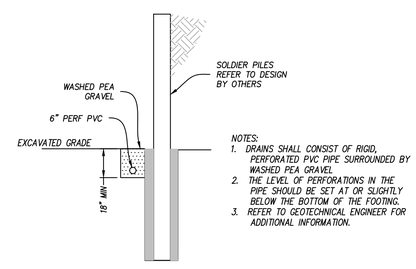

SOLDIER PILE WALL DRAINAGE DETAIL

NTS

811 Know what's below. Call before you dig.

APPROVED: _____ CITY OF MERCER ISLAND DEVELOPMENT SERVICES GROUP Date

DWN BY	CHKD BY	DATE	NOTES
KAL	KAL	3-30-21	SUBMITTED TO CLIENT
KAL	KAL	5-25-21	REVISED PER CITY COMMENTS
JAT	NEM	4-28-22	REVISED PER CITY COMMENTS
TLK	NEM	10-24-22	REVISED PER CITY COMMENTS

G2 CIVIL
1700 NW GILMAN BLVD, STE 200
ISSAQUAH, WA 98027
PHONE: (425) 821-5038

OFF SITE STORM EXTENSION
LOT 1 - SFR (93RD AVE SE)

PREMIUM HOMES OF MERCER ISLAND, LLC
PO BOX 1639
MERCER ISLAND, WA 98040
(206) 724-1072

SHEET
6 of 6

JOB No.

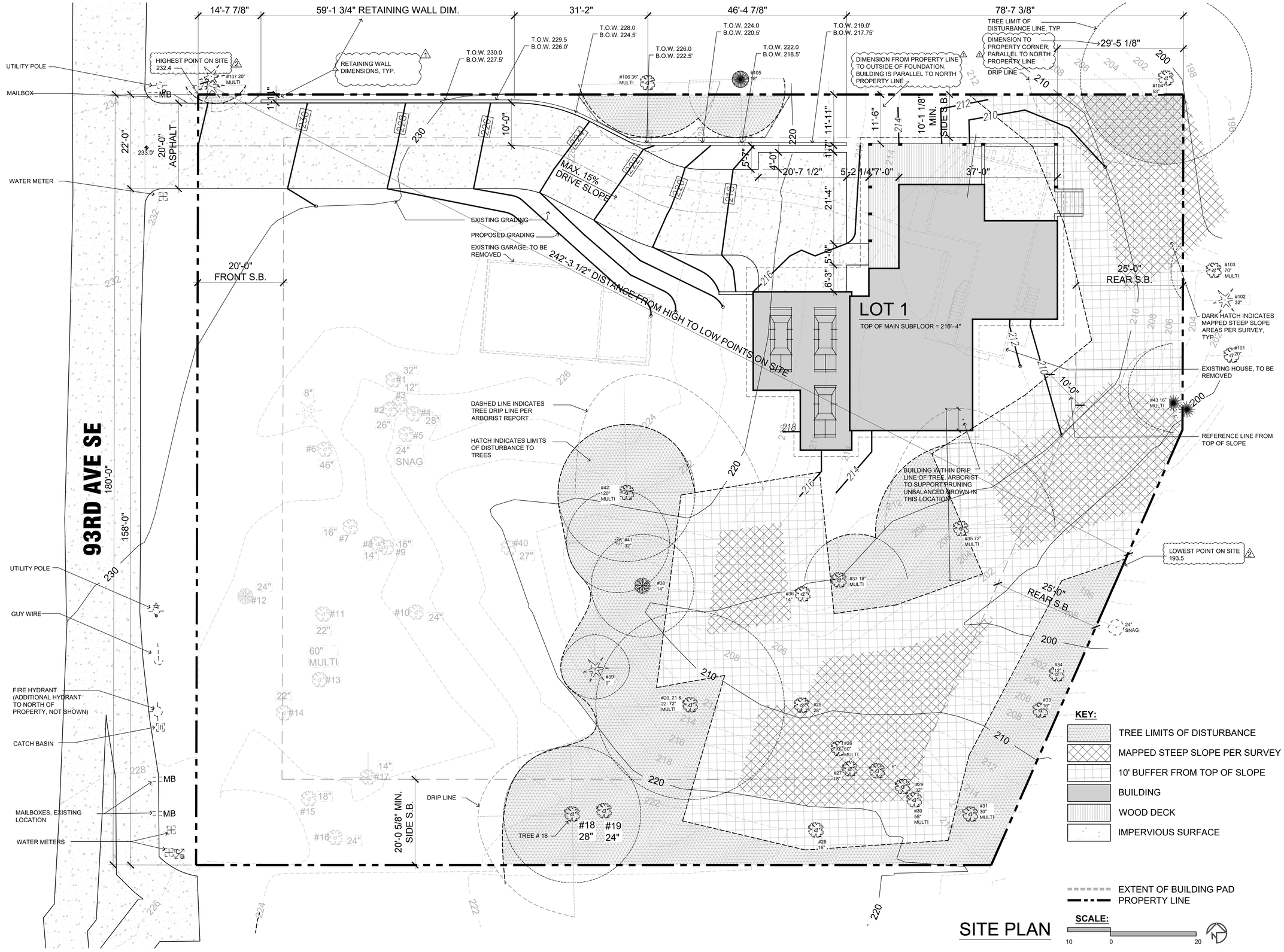

SITE PLAN

MCCULLOUGH ARCHITECTS
5601 6th Ave S, Suite 371
Seattle, WA 98108
206.443.1181
mccullougharchitects.com

UNPUBLISHED WORK 2022 © McCullough Architects

Revisions	Comment
2022.05.03	permit response
	permit response

Date: 2022.02.06
Job No: 19-034
Project No: 00000
Drawn: MCG
Approved: APM

Owner:
PREMIUM HOMES
IN MERCER ISLAND LLC

REGISTERED ARCHITECT ANDREW P. MCCULLOUGH STATE OF WASHINGTON 7606

Lot 1

7216 93rd AVE. SE
MERCER ISLAND, WA 98040

Permit Submittal Set

Site Plan

A1

PROJECT INFORMATION:

39,144 S.F. LOT AREA

LOT SLOPE = 38.9' DROP / 242' LENGTH = 16.1% = 35% LOT COVERAGE ALLOWED

LOT COVERAGE:

HOUSE ROOF	3826
DRIVE	3240
TOTAL	7,066 PROPOSED

13,700 ALLOWED (39,144 NET LOT AREA x .35) 2

GFA: (SEE ADJUSTMENTS PER CALC BELOW)

BASEMENT	444.85
MAIN H&G	2376.52
UPPER	2063.0
TOTAL	4934.46
ALLOWED	5000

2

MAIN T.O. SUBFLOOR	216'-4"
BASEMENT T.O. SLAB	204'-2 1/4"

HEATED S.F.

LOWER FLOOR	1660
MAIN FLOOR	1869
UPPER FLOOR	1916
TOTAL	5445
GARAGE	683

SETBACKS:
AS SHOWN ON PLAN

HARDSCAPE
ALLOWED =9% MAX. NET LOT AREA (DOES NOT INCLUDE DRIVES)

WALKS	16
RETAINING WALLS	92
TOTAL	108 (0.28%)

LANDSCAPING REQUIRED =60% MIN.

HEIGHT AND GFA CALCULATIONS:

GFA CALCULATION:

BASEMENT:	A	B	C	D	E	F	G	O	P	Q	R	S	SUM
MIDPOINT	214	204.1875	204.1875	208.4792	211.75	213.25	213.25	214.5	214.2708	214.2708	214.2708	214.7	
LENGTH	20	8.5	17	23	19.79	26	28.21	4.5	5.458	7	19.625	31.4167	210.4997
COVERAGE	0.973173	0	0	0.425637	0.750025	0.89879	0.89879	1	1	1	1	1	8.946415
RESULT	19.46345	0	0	9.789656	14.84299	23.36854	25.35487	4.5	5.458	7	19.625	31.4167	160.8192

BASEMENT GFA	1884.82
EXCLUDED %	0.763988
INCLUDED %	0.236012
ADJUSTED BSMT GFA	444.8405

MAIN:	A	B	C	D	E	F	G	H	I	J	K	L	M	N	O	P	Q	R	
MIDPOINT	216.33	216.33	216.33	216.33	216.33	216.33	216.33	216.33	216.33	217.25	218.67	218.67	216.33	216.33	216.33	216.33	216.33	216.33	
LENGTH	20	8.5	17	23	19.79	26	28.21	4.58	12	14	11	23	27	1	4.5	5.458	7	19.625	271.663
COVERAGE	0	0	0	0	0	0	0	0	0	0.083636	0.212727	0.212727	0	0	0	0	0	0	0.509091
RESULT	0	0	0	0	0	0	0	0	0	1.170909	2.34	4.892727	0	0	0	0	0	0	8.403636

MAIN GFA	2452.38
EXCLUDED %	0.030934
INCLUDED %	0.969066
ADJUSTED MAIN GFA	2376.518

(2551.38-99 FOR STAIR AT ONE OF FIRST TWO FLOORS)

GFA TOTALS:

BASEMENT	444.8405
MAIN	2376.518
UPPER	2022.94 (@100%)
UPPER	90.165 (60.11X1.5 FOR CEILING OVER 12' @ BA1)
TOTAL	4934.463

2

ABE CALCULATION:

	A	B	C	D	E	F	G	H	I	J	K	L	M	N	O	P	Q	R	
ABE CALC LENGTH	20	8.5	17	23	19.79	26	28.21	4.58	12	14	11	23	27	1	4	5.458	7	19.625	271.163
MIDPOINT	214	204.1875	204.1875	208.4792	211.75	213.25	213.25	214	215.25	217.25	218.67	218.67	216	215	214.5	214	214	214	3840.444
WEIGHTED SUM	4280	1735.594	3471.188	4795.022	4190.533	5544.5	6015.783	980.12	2583	3041.5	2405.37	5029.41	5832	215	858	1168.012	1498	4199.75	57842.78
ABE																			213.3137

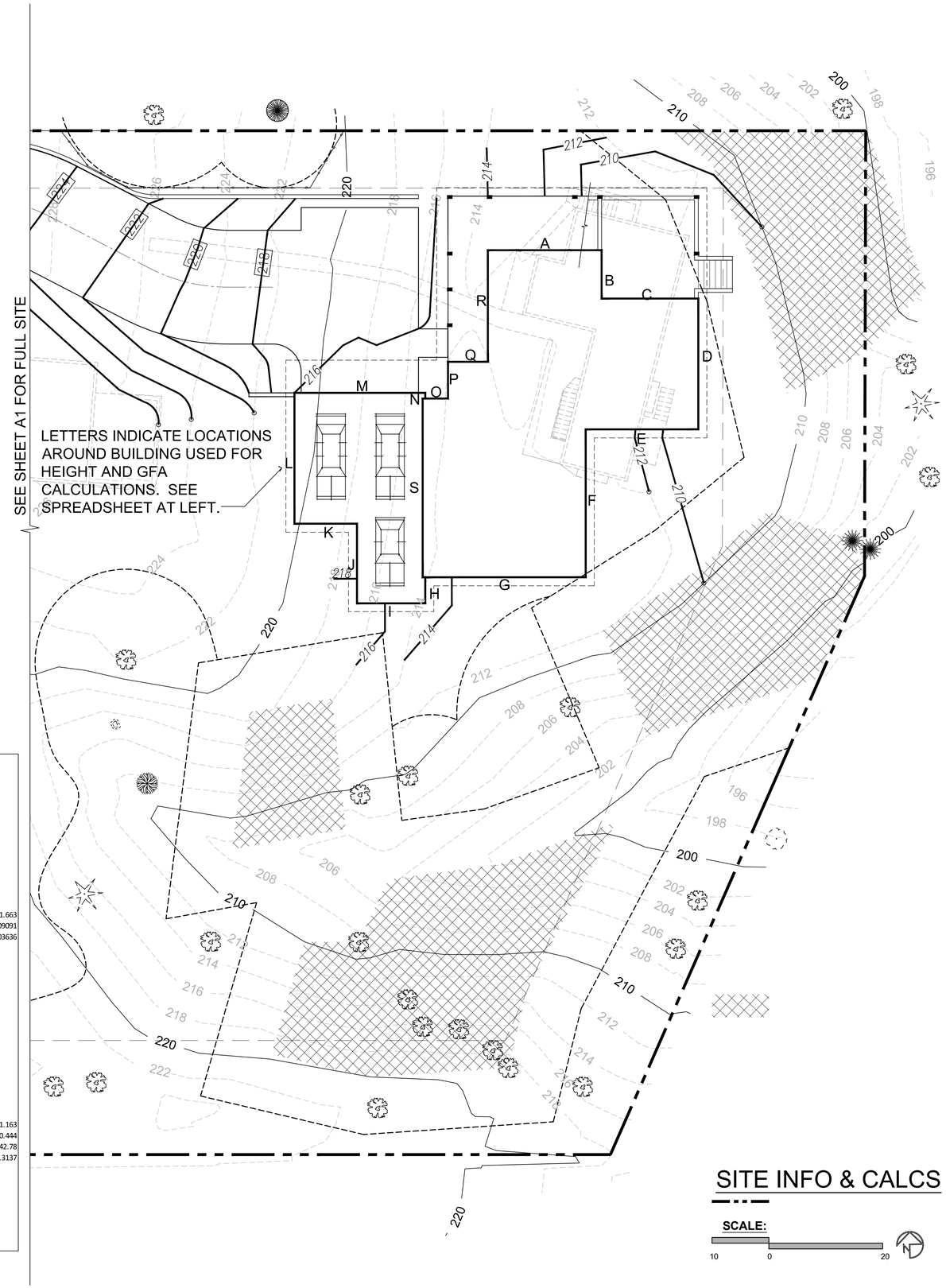

SITE INFO & CALCS

MCCULLOUGH ARCHITECTS
5601 6th Ave S, Suite 371
Seattle, WA 98108
206.443.1181
mcculloughrchitects.com

UNPUBLISHED WORK 2022 © McCullough Architects

Revisions	Comment
2022.05.03	permit response 2
	permit response 1

Date: 2022.02.06
Job No: 19-034
Project No: 00000
Drawn: MCG
Approved: APM

Owner:
PREMIUM HOMES
IN MERCER ISLAND LLC

T806 REGISTERED ARCHITECT PHILIP MCCULLOUGH STATE OF WASHINGTON

Lot 1

7216 93rd AVE. SE
MERCER ISLAND, WA 98040

Permit Submittal Set

A1.1

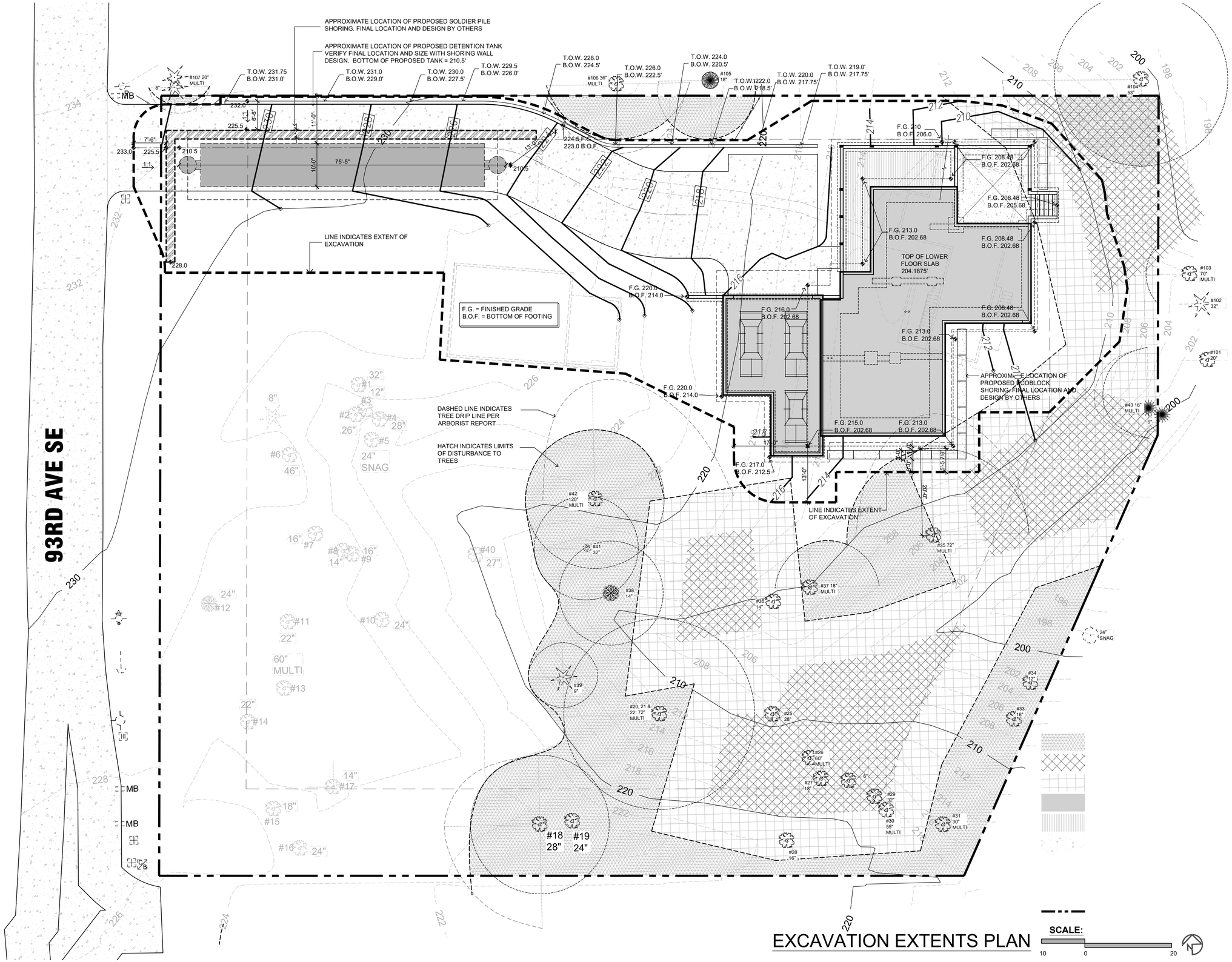

EXCAVATION EXTENTS PLAN

SCALE: 10 0 20

MCCULLOUGH ARCHITECTS
5601 6th Ave S, Suite 371
Seattle, WA 98108
206.443.1181
mccullougharchitects.com

UNPUBLISHED WORK 2022 © McCullough Architects

Revisions	Comment
2022.05.03	permit response
	permit response

Date: 2022.02.06
Job No: 19-034
Project No: 00000
Drawn: MCG
Approved: APM

Owner:
PREMIUM HOMES
IN MERCER ISLAND LLC

REGISTERED ARCHITECT PHILIP A. MCCULLOUGH STATE OF WASHINGTON 7806

Lot 1

7216 93rd AVE. SE
MERCER ISLAND, WA 98040

Permit Submittal Set

Excavation Extents Plan

A1.2

GENERAL NOTES:

1. 8" MIN. CLEARANCE BETWEEN EXTERIOR GRADE & UNPROTECTED WOOD.
2. ALL WOOD IN CONTACT WITH CONCRETE TO BE PRESSURE TREATED.
3. WOOD JOISTS OR THE BOTTOM OF A WOOD STRUCTURAL FLOOR WHEN CLOSER THAN 18" OR WOOD GIRDERS WHEN CLOSER THAN 12" TO THE EXPOSED GROUND IN CRAWL SPACES SHALL BE PROTECTED AGAINST DECAY WITH A PRESERVATIVE-TREATMENT IN ACCORDANCE WITH AWPA U1 AND THE I.R.C. R317.1.
4. THE UNDER-FLOOR GRADE SHALL BE CLEANED OF ALL ORGANIC MATERIAL, AND CONSTRUCTION MATERIAL BEFORE THE BUILDING IS OCCUPIED.
5. ALL DIMENSION LINES ARE TO FACE OF FRAMING OR CONCRETE, U.N.O.
6. PROVIDE MIN. 6 MIL VAPOR BARRIER @ CRAWLSPACE & SLAB ON GRADE.
7. SEE SHEAR WALL SCHEDULE FOR LOCATION & SPACING OF ANCHOR BOLTS.
8. INSTALL ALL HOLD DOWNS AND HARDWARE PRIOR TO BACKFILLING.
9. EXTERIOR FOOTINGS TO BEAR ON FIRM UNDISTURBED SOIL BELOW ORGANIC SURFACE SOIL, A MINIMUM 2'-0" BELOW FINISH GRADE.
10. UNLESS A SOILS INVESTIGATION BY A QUALIFIED SOILS ENGINEER IS PROVIDED, FOUNDATION DESIGN IS BASED ON ASSUMED AVERAGE BEARING CAPACITY OF 2000 PSF.

SYMBOL KEY:

P.L.● INDICATES LOC. OF POINT LOAD FROM ABOVE (TYP.)

TYPICAL DECK HANGER @ MAIN FLOOR IS SIMPSON LUS212, U.N.O.
HANGERS @ ENGINEERED JOISTS TO BE SPECIFIED BY JOIST MANUFACTURER, U.N.O.

HD_ INDICATES HOLD DOWN PER STRUCTURAL NOTES, S-0.0

STRUCTURAL NOTES:

1. @ HD-1 LOCATIONS, FASTEN STRAP HD TO TRUSS VERTICAL. PROVIDE ADDITIONAL BLOCKING AS REQUIRED FOR STRAP FASTENING. FASTEN TRUSS VERTICAL TO POST ABOVE W/ (2) CS14 STRAPS. (TYP.)

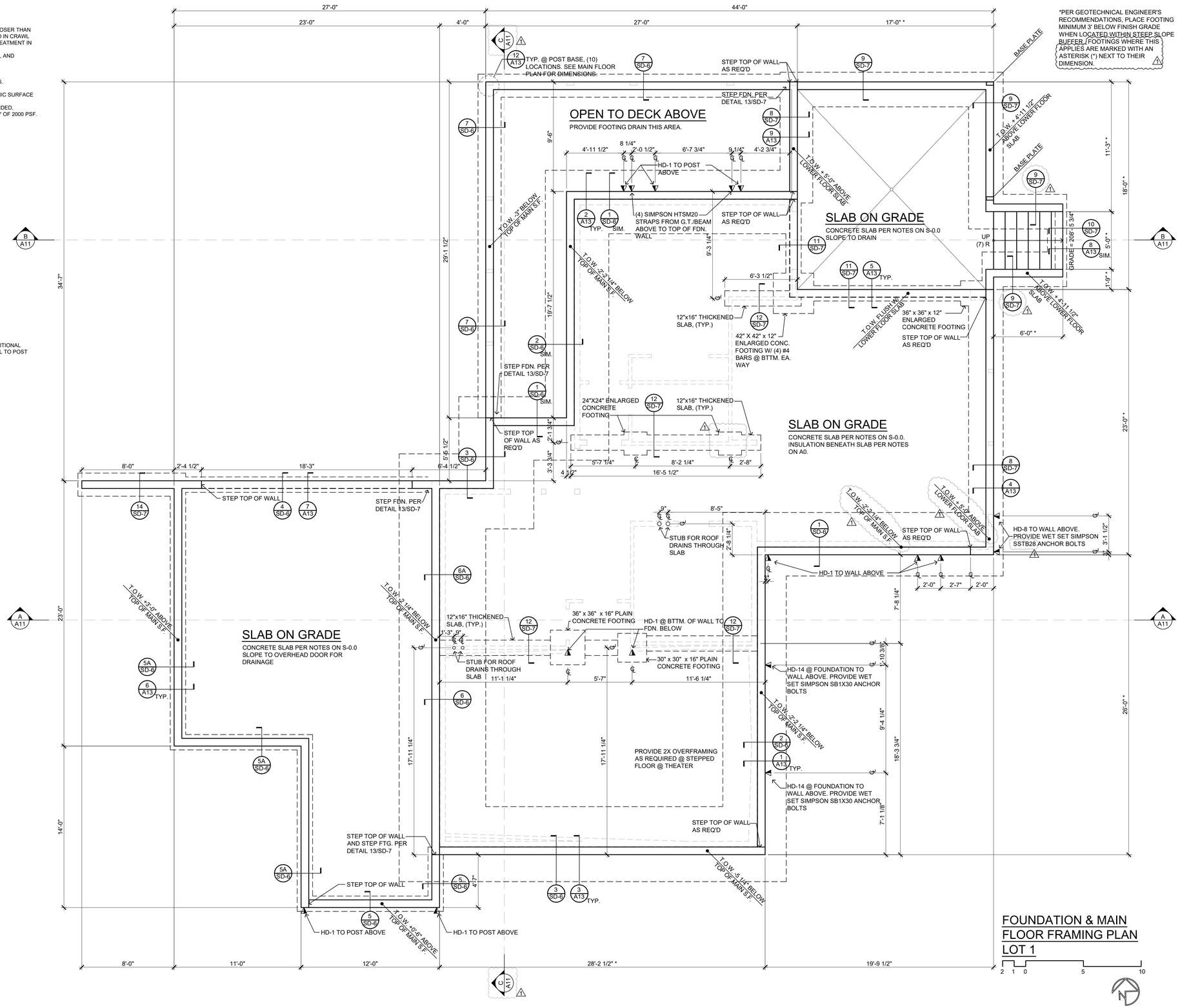

FOUNDATION & MAIN FLOOR FRAMING PLAN
LOT 1

2 1 0 5 10

MCCULLOUGH ARCHITECTS
5601 6th Ave S, Suite 371
Seattle, WA 98108
206.443.1181
mccullougharchitects.com

UNPUBLISHED WORK 2022 © McCullough Architects

Revisions	Comment
2022.05.03	permit response
2022.11.14	permit response

Date: 2021.05.10
Job No: 19-034
Project No: 00000
Drawn: MCG
Approved: APM

Owner:
PREMIUM HOMES
IN MERCER ISLAND LLC

REGISTERED ARCHITECT PHILIP A. MCCULLOUGH STATE OF WASHINGTON 7606

LOT 1

7216 93rd AVE. SE
MERCER ISLAND, WA 98040

Permit Submittal Set

Foundation Plan

A2

GENERAL NOTES:

1. DIMENSION LINES ARE TO FACE OF STUD U.N.O.
2. WINDOW SIZES & ROUGH OPENINGS TO BE VERIFIED BY CONTRACTOR.
3. IF NOMINAL DOOR AND WINDOW HEIGHTS ARE SIMILAR, COORDINATE WITH DOOR AND WINDOW SPEC'S TO LOCATE FINAL ELEVATION OF THE HEAD HEIGHTS SO THAT ALL DOOR AND WINDOW TRIM ALIGN.
4. WINDOW AND DOOR SIZES ARE DIMENSIONED IN FEET AND INCHES (E.G. 2828= 2'-8"W X 2'-8"H)
5. EXTERIOR WALLS TO BE 2X6 STUDS PER STRUCTURAL, INTERIOR WALLS TO BE 2X4 STUDS PER STRUCTURAL.
6. FIREBLOCK ALL PLUMBING PENETRATIONS AND STAIR RUNS PER IRC SEC. R302.11.
7. ALL WOOD IN CONTACT WITH CONCRETE TO BE PRESSURE TREATED PER IRC SEC. R317.1.
8. PROVIDE UNDER-STAIR PROTECTION (1/2" GWB) PER IRC SEC R302.7.
9. PROVIDE (1) LAYER OF 1/2" GWB AT THE GARAGE SIDE OF ALL WALLS SEPARATING THE GARAGE FROM THE RESIDENCE, ALL WALLS SUPPORTING A FLOOR CEILING ASSEMBLY BETWEEN THE GARAGE AND RESIDENCE, AND BETWEEN THE GARAGE AND ITS ATTIC. PROVIDE (1) LAYER 5/8" TYPE X GWB TO GARAGE CEILING IF BELOW HABITABLE ROOMS.
10. HOUSE/GARAGE DOOR SHALL BE 1-3/8" THICK WOOD SOLID CORE, OR 1-3/8" THICK SOLID OR HONEYCOMB CORE STEEL DOOR, OR 20-MINUTE RATED FIRE DOOR. PROVIDE SELF-CLOSING DEVICE.
11. DUCTS IN THE GARAGE AND DUCTS PENETRATING THE WALLS AND CEILINGS SEPARATING THE DWELLING FROM THE GARAGE SHALL BE MIN. 26 GAUGE GALVANIZED STEEL.
12. PER IRC SEC R311.7.5. MAX. RISER HEIGHT SHALL BE 7-3/4". MIN. TREAD DEPTH SHALL BE 10". STAIR NOSINGS: 3/4" MIN., 1-1/4" MAX. RADIUS @ LEADING EDGE OF TREAD: 9/16" MAX.
13. PROVIDE HANDRAILS PER IRC SEC. R311.7.8. TOP OF HANDRAIL SHALL BE NOT LESS THAN 34" OR MORE THAN 38" ABOVE THE TREAD NOSINGS. HANDRAILS SHALL BE CONTINUOUS THE FULL LENGTH OF THE FLIGHT PER R311.7.8.2. THE HANDRAIL GRIP-SIZE SHALL BE PROVIDED PER R311.7.8.3.
14. PROVIDE GUARDS (MIN. 36" HEIGHT) IN LOCATIONS PER IRC SEC. R312.
15. FACTORY BUILT FIREPLACES & CHIMNEYS SHALL BE LISTED & LABELED AND SHALL BE INSTALLED & TERMINATED IN ACCORDANCE TO THE CONDITIONS OF THE LISTINGS. FACTORY BUILT FIREPLACES SHALL MEET EMISSION STANDARDS PER CH. 51-51 WAC R1004.1.1.
16. PROVIDE EXTERIOR AIR SUPPLY TO ANY FACTORY-BUILT FIREPLACE PER IRC SEC R1006.
17. WATER HEATERS SHALL COMPLY WITH THE REQUIREMENTS OF THE IRC CH. 20 AND 28

17.1. INSTALL PER MANUFACTURERS SPECIFICATIONS, PROVIDING ALL SPECIFIED CLEARANCES & VENTILATION.

17.2. WATER HEATERS SHALL BE ANCHORED OR STRAPPED IN THE UPPER ONE-THIRD AND IN THE LOWER ONE-THIRD OF THE APPLIANCE.

18. ALL SHOWER AND TUB FIXTURES TO HAVE THERMOSTATIC CONTROL W/ 120° F. MAX. SETTING FOR THERMAL PROTECTION PER UPC 408.3 & 409.4.

PLAN KEY:

- 110V / S.D. — INDICATES 110V SMOKE DET. PER I.R.C. 314.3 INTERCONNECTED W/ EMERGENCY BATTERY BACKUP
- CO / ALARM — INDICATES CARBON MONOXIDE ALARM PER I.R.C. R315.1

MAY BE COMBINED

- FAN / V.T.D. — INDICATES EXHAUST VENTILATION FAN. SEE "LOCAL EXHAUST" ON COVER SHEET FOR ADDITIONAL INFORMATION.
- SW — INDICATES SHEAR WALL PER STRUCTURAL. SEE "TYPICAL EXTERIOR WALL SHEATHING SPECIFICATIONS" ON SHEET S-0.0.
- HD — INDICATES HOLD DOWN PER STRUCTURAL NOTES, S-0.0
- S.G. — SAFETY GLASS REQUIRED PER IRC R308

STRUCTRUAL NOTES:

1. PROVIDE 7/16" OSB & SHEATH PER TYP. EXT. SHEATHING SPEC. (SEE STRUCTURAL NOTES SHEET S0.0)
2. FASTEN END STUD TO CONCRETE WALL W/ 1/4" X 3 1/2" TAPCONS @ 12" O.C. VERTICALLY
3. ALL WOOD MEMBERS EXPOSED TO WEATHER SHALL BE NATURALLY DECAY RESISTANT OR PRESERVATIVE TREATED.

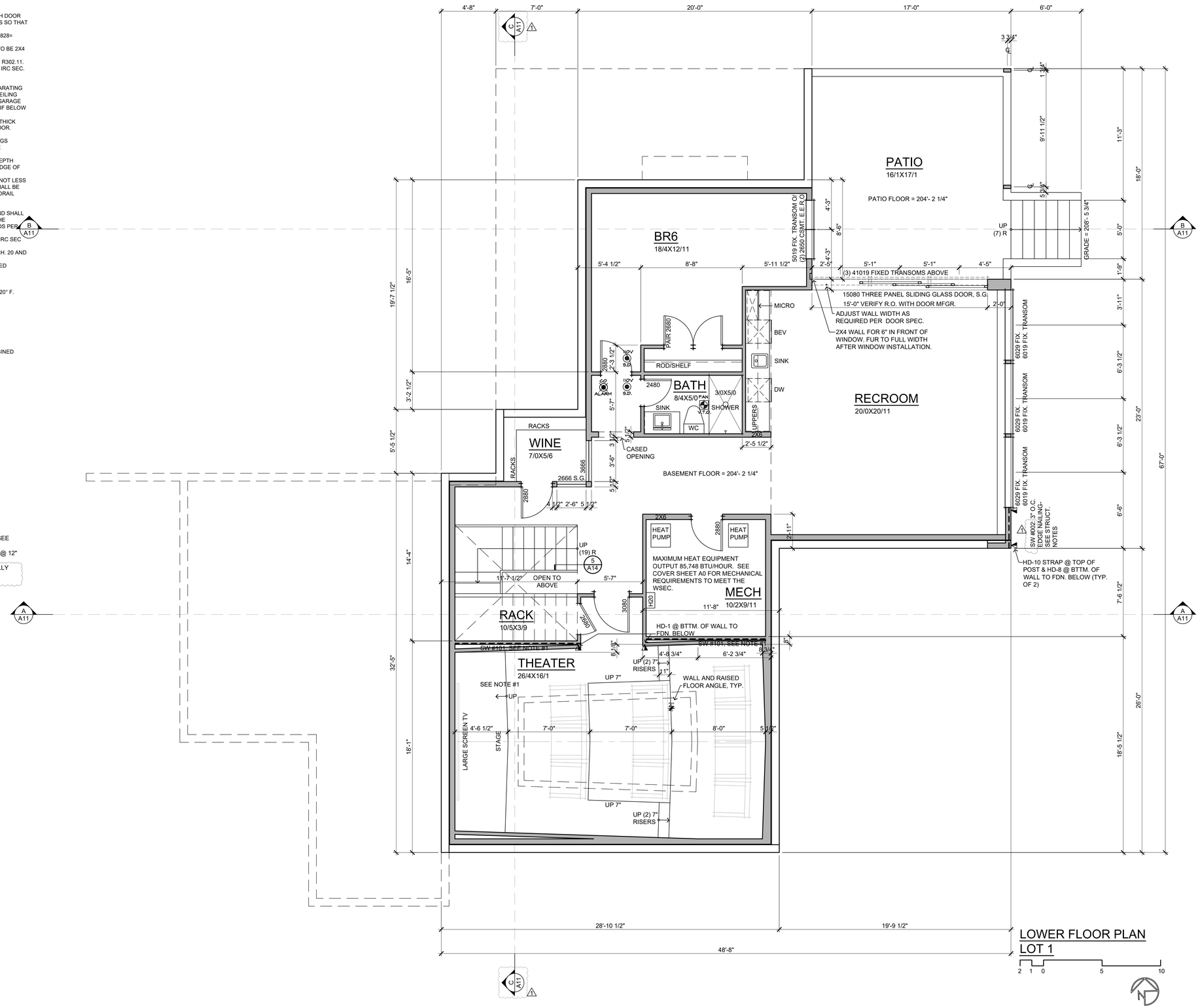

MCCULLOUGH ARCHITECTS
5601 6th Ave S, Suite 371
Seattle, WA 98108
206.443.1181
mccullougharchitects.com

UNPUBLISHED WORK 2022 © McCullough Architects

Revisions	Comment
2022.05.03	permit response
2022.11.14	permit response

Date: 2021.05.10
Job No: 19-034
Project No: 00000
Drawn: MCG
Approved: APM

Owner:
PREMIUM HOMES
IN MERCER ISLAND LLC

REGISTERED ARCHITECT 7606 PHILIP MCCULLOUGH STATE OF WASHINGTON

LOT 1

7216 93rd AVE. SE
MERCER ISLAND, WA 98040

Permit Submittal Set

Lower Floor Plan

A3

GENERAL NOTES:
1. UPPER FLOOR FRAMING TO BE PRE-MANUFACTURED FLOOR TRUSSES PER PLAN WITH 3/4" OSB SUBFLOOR, GLUED AND NAILED, U.N.O. ADHESIVES SHALL CONFORM TO APA SPEC. AFG 01. PROVIDE T&G EDGES AT LONG PANEL EDGES. STAGGER SUBFLOOR END JOINTS.
2. BEARING WALLS ARE SHADED.
3. ALL MARKED POSTS ARE BELOW THE FRAMING SHOWN ON THIS PLAN.
4. PROVIDE SOLID BLOCKING IN FLOOR AT ALL WALLS AND POINT LOADS FROM ABOVE.
5. PROVIDE (2) 2X POST @ ALL BEAMS, HEADERS, TRUSS GIRDERS, & HOLD DOWNS, TYP.
6. EXTERIOR WALL STUDS SHALL BE 2X6 #2 GRADE HF @16" O.C. OR BETTER, U.N.O.

KEY:

P.L.● INDICATES LOC. OF POINT LOAD FROM ABOVE (TYP.)

INDICATES LOC. OF SOLID SUPPORT (2) STUDS LAM'D W/ 16d @ 12" O.C., (2) 16d EA. END TYP. UNLESS NOTED OTHERWISE

HANGERS @ ENGINEERED JOISTS TO BE SPECIFIED BY JOIST MANUFACTURER, U.N.O.

HD_ INDICATES HOLD DOWN PER STRUCTURAL NOTES, S-0.0

THICK DASHED LINE INDICATES CONTINUOUS 1/2" G.W.B. DRAFTSTOP PER R302.12 APPLIED TO SIDE OF FLOOR TRUSS. FASTEN W/ 1 1/2" GALV. ROOF NAIL OR STAPLE @ 7" O.C. EA. SUPPORT. INTEGRITY OF DRAFSTOP SHALL BE MAINTAINED.

A.S.F. =ABOVE (TOP OF) SUBFLOOR 1

STRUCTRUAL NOTES:
1. PROVIDE 7/16" OSB & SHEATH PER TYP. EXT. SHEATHING SPEC. (SEE STRUCTURAL NOTES SHEET S0.0)
2. FASTEN END STUD TO CONCRETE WALL W/ 1/4" X 3 1/4" TAPCONS @ 12" O.C. VERTICALLY (STAGGERED).

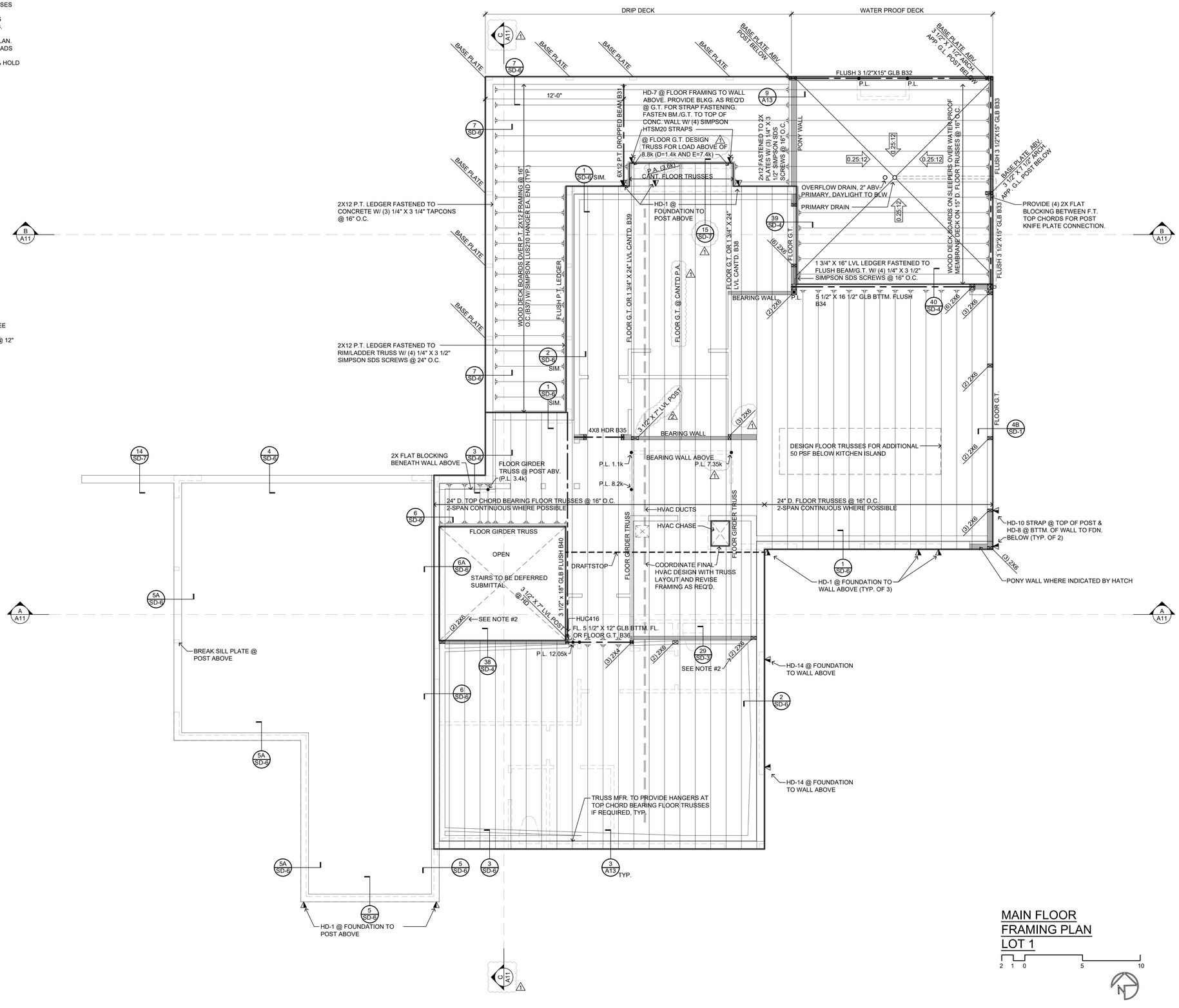

MAIN FLOOR FRAMING PLAN
LOT 1

2 1 0 5 10

MCCULLOUGH ARCHITECTS
5601 6th Ave S, Suite 371
Seattle, WA 98108
206.443.1181
mccullougharchitects.com

UNPUBLISHED WORK 2022 © McCullough Architects

Revisions	Comment
2022.05.03	permit response 1
2022.11.14	permit response 2

Date: 2021.05.10
Job No: 19-034
Project No: 00000
Drawn: MCG
Approved: APM

Owner:
PREMIUM HOMES
IN MERCER ISLAND LLC

REGISTERED ARCHITECT PHILIP M. MCCULLOUGH STATE OF WASHINGTON 7806

LOT 1

7216 93rd AVE. SE
MERCER ISLAND, WA 98040

Permit Submittal Set

Main Floor Framing Plan

A4

GENERAL NOTES:

1. DIMENSION LINES ARE TO FACE OF STUD U.N.O.
2. WINDOW SIZES & ROUGH OPENINGS TO BE VERIFIED BY CONTRACTOR.
3. IF NOMINAL DOOR AND WINDOW HEIGHTS ARE SIMILAR, COORDINATE WITH DOOR AND WINDOW SPEC'S TO LOCATE FINAL ELEVATION OF THE HEAD HEIGHTS SO THAT ALL DOOR AND WINDOW TRIM ALIGN.
4. WINDOW AND DOOR SIZES ARE DIMENSIONED IN FEET AND INCHES (E.G. 2828= 2'-8"W X 2'-8"H)
5. EXTERIOR WALLS TO BE 2X6 STUDS PER STRUCTURAL, INTERIOR WALLS TO BE 2X4 STUDS PER STRUCTURAL.
6. FIREBLOCK ALL PLUMBING PENETRATIONS AND STAIR RUNS PER IRC SEC. R302.11.
7. ALL WOOD IN CONTACT WITH CONCRETE TO BE PRESSURE TREATED PER IRC SEC. R317.1.
8. PROVIDE UNDER-STAIR PROTECTION (1/2" GWB) PER IRC SEC R302.7.
9. PROVIDE (1) LAYER OF 1/2" GWB AT THE GARAGE SIDE OF ALL WALLS SEPARATING THE GARAGE FROM THE RESIDENCE, ALL WALLS SUPPORTING A FLOOR CEILING ASSEMBLY BETWEEN THE GARAGE AND RESIDENCE, AND BETWEEN THE GARAGE AND ITS ATTIC. PROVIDE (1) LAYER 5/8" TYPE X GWB TO GARAGE CEILING IF BELOW HABITABLE ROOMS.
10. HOUSE/GARAGE DOOR SHALL BE 1-3/8" THICK WOOD SOLID CORE, OR 1-3/8" THICK SOLID OR HONEYCOMB CORE STEEL DOOR, OR 20-MINUTE RATED FIRE DOOR. PROVIDE SELF-CLOSING DEVICE.
11. DUCTS IN THE GARAGE AND DUCTS PENETRATING THE WALLS AND CEILINGS SEPARATING THE DWELLING FROM THE GARAGE SHALL BE MIN. 26 GAUGE GALVANIZED STEEL.
12. PER IRC SEC R311.7.5. MAX. RISER HEIGHT SHALL BE 7-3/4". MIN. TREAD DEPTH SHALL BE 10". STAIR NOSINGS: 3/4" MIN., 1-1/4" MAX. RADIUS @ LEADING EDGE OF TREAD: 9/16" MAX.
13. PROVIDE HANDRAILS PER IRC SEC. R311.7.8. TOP OF HANDRAIL SHALL BE NOT LESS THAN 34" OR MORE THAN 38" ABOVE THE TREAD NOSINGS. HANDRAILS SHALL BE CONTINUOUS THE FULL LENGTH OF THE FLIGHT PER R311.7.8.2. THE HANDRAIL GRIP-SIZE SHALL BE PROVIDED PER R311.7.8.3.
14. PROVIDE GUARDS (MIN. 36" HEIGHT) IN LOCATIONS PER IRC SEC. R312.
15. FACTORY BUILT FIREPLACES & CHIMNEYS SHALL BE LISTED & LABELED AND SHALL BE INSTALLED & TERMINATED IN ACCORDANCE TO THE CONDITIONS OF THE LISTINGS. FACTORY BUILT FIREPLACES SHALL MEET EMISSION STANDARDS PER CH. 51-51 WAC R1004.1.1.
16. PROVIDE EXTERIOR AIR SUPPLY TO ANY FACTORY-BUILT FIREPLACE PER IRC SEC R1006.
17. WATER HEATERS SHALL COMPLY WITH THE REQUIREMENTS OF THE IRC CH. 20 AND 28

17.1. INSTALL PER MANUFACTURERS SPECIFICATIONS, PROVIDING ALL SPECIFIED CLEARANCES & VENTILATION.

17.2. WATER HEATERS SHALL BE ANCHORED OR STRAPPED IN THE UPPER ONE-THIRD AND IN THE LOWER ONE-THIRD OF THE APPLIANCE.

18. ALL SHOWER AND TUB FIXTURES TO HAVE THERMOSTATIC CONTROL W/ 120° F. MAX. SETTING FOR THERMAL PROTECTION PER UPC 408.3 & 409.4.

PLAN KEY:

- 110V S.D. — INDICATES 110V SMOKE DET. PER I.R.C. 314.3 INTERCONNECTED W/ EMERGENCY BATTERY BACKUP
- CO ALARM — INDICATES CARBON MONOXIDE ALARM PER I.R.C. R315.1
- MAY BE COMBINED
- FAN V.T.O. — INDICATES EXHAUST VENTILATION FAN. SEE "LOCAL EXHAUST" ON COVER SHEET FOR ADDITIONAL INFORMATION.
- SW — INDICATES SHEAR WALL PER STRUCTURAL. SEE "TYPICAL EXTERIOR WALL SHEATHING SPECIFICATIONS" ON SHEET S-0.0.
- HD_ — INDICATES HOLD DOWN PER STRUCTURAL NOTES, S-0.0
- S.G. — SAFETY GLASS REQUIRED PER IRC R308

STRUCTRUAL NOTES:

1. PROVIDE 7/16" OSB & SHEATH PER TYP. EXT. SHEATHING SPEC. (SEE STRUCTURAL NOTES SHEET S0.0)
2. PROVIDE 7/16" OSB & SHEATH PER 3" O.C. EXT. SHEATHING SPEC. (SEE STRUCTURAL NOTES SHEET S0.0)
3. PROVIDE CS16 STRAP FROM TOP OF DBL. TOP PLATE TO UNDERSIDE OF FULL DEPTH BLOCKING BETWEEN FLOOR TRUSS BTTM. CHORDS. PROVIDE BLOCKING FIRST 3 BAYS OR 6'-0" MIN. PROVIDE 13" MIN. END LENGTH ON DBL. TOP PLATE.
4. PROVIDE CS16 STRAP FROM TOP OF DBL. TOP PLATE TO UNDERSIDE OF FLOOR DRAG TRUSS. PROVIDE 13" MIN. END LENGTH ON DBL. TOP PLATE AND DRAG TRUSS.
5. PROVIDE CS16 STRAP FROM TOP OF DBL. TOP PLATE TO UNDERSIDE OF FLUSH BEAM. PROVIDE 13" MIN. END LENGTH ON DBL. TOP PLATE & FLUSH BEAM.
6. PROVIDE 2X PLATE FASTENED TO TOP FLANGE OF BM. W/ P.A.F.'s (HILTI X-U PINS OR EQ. (0.157" Ø X 2" MIN.)) @ 16" O.C. STAGGERED OR 1/2" Ø THRU BOLTS @ 48" O.C. STAGGERED.
7. INTERRUPT DBL. TOP PLATE & SILL PLATE AT POST LOCATION SUCH THAT FLUSH TOP BEAM BEARS DIRECTLY ON GLB POST AND POST BEARS DIRECTLY ON FND. PROVIDE CS16 STRAP AT EACH PLY OF INTERRUPTED DBL. TOP PLATE. STRAP TO BE CENTERED ON POST AND HAVE 13" MIN. END LENGTH ON EACH PLY OF DOUBLE TOP PLATE.
8. PROVIDE CS16 STRAP FROM TOP OF DRAG TRUSS TO TOP OF FLUSH TOP BEAM. PROVIDE 13" MIN. END LENGTH ON BEAM AND DRAG TRUSS.
9. PROVIDE CS16 STRAP FROM UNDERSIDE OF DRAG TRUSS TO G.T./ BOTTOM BEAM. PROVIDE 13" MIN. END LENGTH ON DRAG TRUSS AND G.T./BEAM.
10. PROVIDE (3) 2X4 POST DIRECTLY BELOW (2) 2X6 POST ABOVE AT AREA WHERE WALL IS TO BE HELD @ 2X4 WIDTH FOR WINDOW INSTALLATION. FURR OUT WALL W/ SOLID 2X AFTER WINDOW INSTALLATION & PROVIDE 2X BLOCKING IN FLOOR SYSTEM BELOW POST ABOVE.

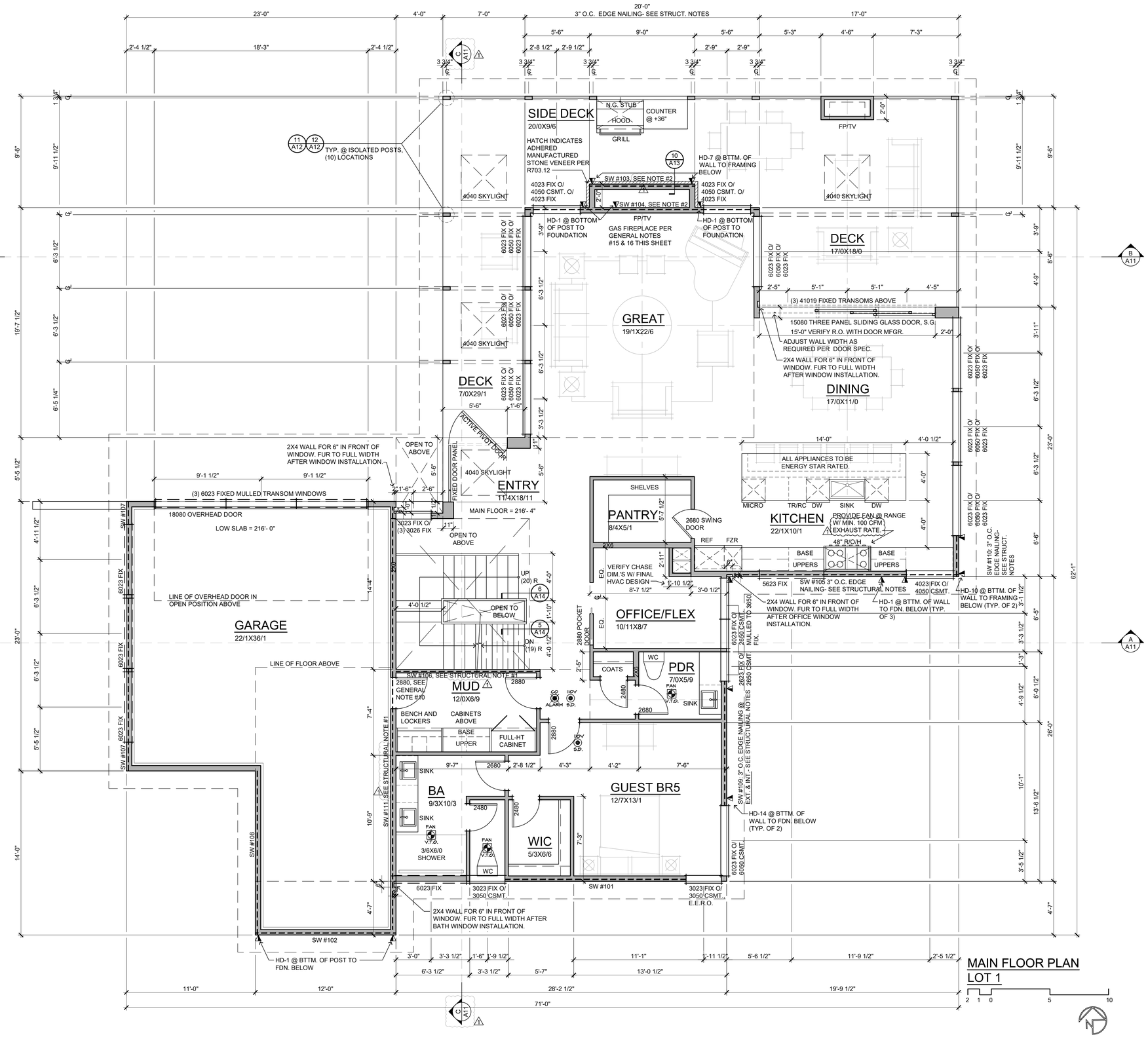

MAIN FLOOR PLAN
LOT 1

MCCULLOUGH ARCHITECTS
5601 6th Ave S, Suite 371
Seattle, WA 98108
206.443.1181
mccullougharchitects.com

UNPUBLISHED WORK 2022 © McCullough Architects

Revisions	Comment
2022.05.03	permit response
2022.11.14	permit response

Date: 2021.05.10
Job No: 19-034
Project No: 00000
Drawn: MCG
Approved: APM

Owner:
PREMIUM HOMES
IN MERCER ISLAND LLC

REGISTERED ARCHITECT 7606 PHILIP A. MCCULLOUGH STATE OF WASHINGTON

LOT 1

7216 93rd AVE. SE
MERCER ISLAND, WA 98040

Permit Submittal Set

Main Floor Plan

A5

GENERAL NOTES:
1. UPPER FLOOR FRAMING TO BE PRE-MANUFACTURED FLOOR TRUSSES PER PLAN WITH 3/4" OSB SUBFLOOR, GLUED AND NAILED, U.N.O. ADHESIVES SHALL CONFORM TO APA SPEC. AFG 01. PROVIDE T&G EDGES AT LONG PANEL EDGES. STAGGER SUBFLOOR END JOINTS.
2. BEARING WALLS ARE SHADED.
3. ALL MARKED POSTS ARE BELOW THE FRAMING SHOWN ON THIS PLAN.
4. PROVIDE SOLID BLOCKING IN FLOOR AT ALL WALLS AND POINT LOADS FROM ABOVE.
5. PROVIDE (2) 2X POST @ ALL BEAMS, HEADERS, TRUSS GIRDERS, & HOLD DOWNS, TYP.
6. EXTERIOR WALL STUDS SHALL BE 2X6 #2 GRADE HF @16" O.C. OR BETTER, U.N.O.
7. TYPICAL HEADERS TO BE 6X8 (B22) U.N.O.

KEY:

P.L.● INDICATES LOC. OF POINT LOAD FROM ABOVE (TYP.)

INDICATES LOC. OF SOLID SUPPORT (2) STUDS LAM'D W/ 16d @ 12" O.C., (2) 16d EA. END TYP. UNLESS NOTED OTHERWISE

HANGERS @ FLOOR TRUSSES TO BE SPECIFIED BY JOIST MANUFACTURER, U.N.O.

HD_ INDICATES HOLD DOWN PER STRUCTURAL NOTES, S-0

THICK DASHED LINE INDICATES CONTINUOUS 1/2" G.W.B. DRAFTSTOP PER R302.12 APPLIED TO SIDE OF FLOOR TRUSS. FASTEN W/ 1 1/2" GALV. ROOF NAIL OR STAPLE @ 7" O.C. EA. SUPPORT. INTEGRITY OF DRAFSTOP SHALL BE MAINTAINED.

A.S.F. =ABOVE (TOP OF) SUBFLOOR

STRUCTRUAL NOTES:
1. PROVIDE 7/16" OSB & SHEATH PER TYP. EXT. SHEATHING SPEC. (SEE STRUCTURAL NOTES SHEET S-0)
2. PROVIDE 7/16" OSB & SHEATH PER 3" O.C. EXT. SHEATHING SPEC. (SEE STRUCTURAL NOTES SHEET S-0)
3. PROVIDE CS16 STRAP FROM TOP OF DBL. TOP PLATE TO UNDERSIDE OF FULL DEPTH BLOCKING BETWEEN FLOOR TRUSS BTTM. CHORDS. PROVIDE BLOCKING FIRST 3 BAYS OR 6'-0" MIN. PROVIDE 13" MIN. END LENGTH ON DBL. TOP PLATE.
4. PROVIDE CS16 STRAP FROM TOP OF DBL. TOP PLATE TO UNDERSIDE OF FLOOR DRAG TRUSS. PROVIDE 13" MIN. END LENGTH ON DBL. TOP PLATE AND DRAG TRUSS.
5. PROVIDE CS16 STRAP FROM TOP OF DBL. TOP PLATE TO UNDERSIDE OF FLUSH BEAM. PROVIDE 13" MIN. END LENGTH ON DBL. TOP PLATE & FLUSH BEAM.
6. PROVIDE 2X PLATE FASTENED TO TOP FLANGE OF BM. W/ P.A.F.'s (HILTI X-U PINS OR EQ. (0.157" Ø X 2" MIN.)) @ 16" O.C. STAGGERED OR 1/2" Ø THRU BOLTS @ 48" O.C. STAGGERED. STEEL HDR TO INTERRUPT DBL. TOP PLATE. FASTEN TOP PLY OF DBL. TOP PLATE TO 2X PLATE ATOP STEEL BEAM WITH CS16 STRAP W/ 13" END LENGTH EA. END.
7. INTERRUPT DBL. TOP PLATE & SILL PLATE AT POST LOCATION SUCH THAT FLUSH TOP BEAM BEARS DIRECTLY ON GLB POST AND POST BEARS DIRECTLY ON FND. PROVIDE CS16 STRAP AT EACH PLY OF INTERRUPTED DBL. TOP PLATE. STRAP TO BE CENTERED ON POST AND HAVE 13" MIN. END LENGTH ON EACH PLY OF DOUBLE TOP PLATE.
8. PROVIDE CS16 STRAP FROM TOP OF DRAG TRUSS TO TOP OF FLUSH TOP BEAM. PROVIDE 13" MIN. END LENGTH ON BEAM AND DRAG TRUSS.
9. PROVIDE CS16 STRAP FROM UNDERSIDE OF DRAG TRUSS TO G.T./ BOTTOM BEAM. PROVIDE 13" MIN. END LENGTH ON DRAG TRUSS AND G.T./BEAM.
10. PROVIDE (3) 2X4 POST DIRECTLY BELOW (2) 2X6 POST ABOVE AT AREA WHERE WALL IS TO BE HELD @ 2X4 WIDTH FOR WINDOW INSTALLATION. FURR OUT WALL W/ SOLID 2X AFTER WINDOW INSTALLATION & PROVIDE 2X BLOCKING IN FLOOR SYSTEM BELOW POST ABOVE.
11. PROVIDE CS16 STRAP FROM FLUSH BM. @ STAIRS TO ADDITIONAL TRUSS. PROVIDE 13" MIN. END LENGTH ON BM./TRUSS
12. CANT. FLUSH TOP BEAM TO PERIMETER OF ROOF OVERHANG. NOTCH BEAM TO 12" DEPTH @ OVERHANG ONLY TO SUPPORT END TRUSS. BEAM SHALL HAVE FULL DEPTH AT POST IN EXTERIOR WALL. DO NOT OVER-NOTCH BEAM.
13. ALL WOOD MEMBERS EXPOSED TO WEATHER SHALL BE NATURALLY DECAY RESISTANT OR PRESERVATIVE TREATED.

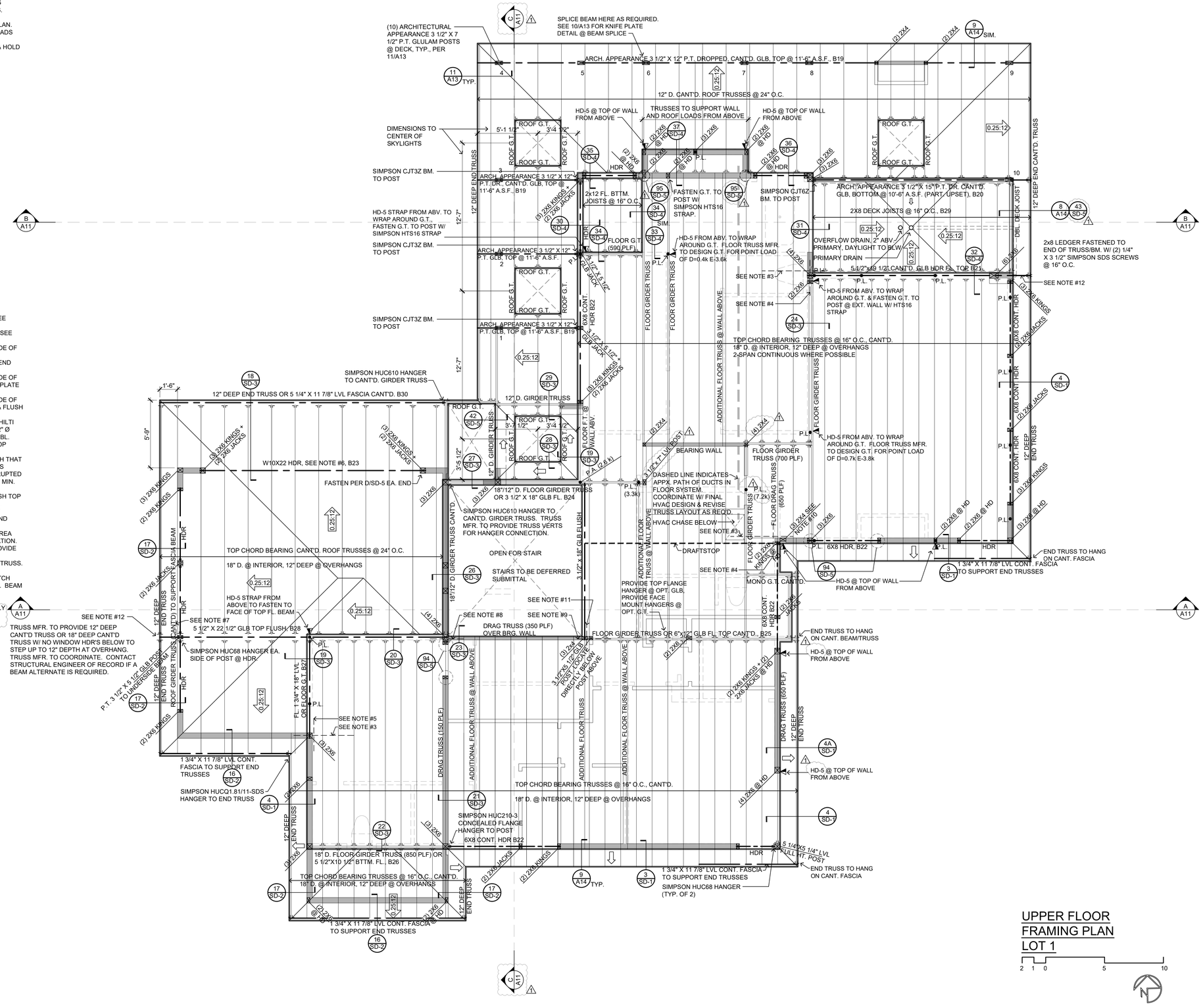

UPPER FLOOR FRAMING PLAN
LOT 1

2 1 0 5 10

MCCULLOUGH ARCHITECTS
5601 6th Ave S, Suite 371
Seattle, WA 98108
206.443.1181
mccullougharchitects.com

UNPUBLISHED WORK 2022 © McCullough Architects

Revisions	Comment
2022.05.03	permit response
2022.11.14	permit response

Date: 2021.05.10
Job No: 19-034
Project No: 00000
Drawn: MCG
Approved: APM

Owner:
PREMIUM HOMES
IN MERCER ISLAND LLC

REGISTERED ARCHITECT PHILIP A. McCULLOUGH STATE OF WASHINGTON 7606

LOT 1

7216 93rd AVE. SE
MERCER ISLAND, WA 98040

Permit Submittal Set

Upper Floor Framing Plan

A6

GENERAL NOTES:

1. DIMENSION LINES ARE TO FACE OF STUD U.N.O.
2. WINDOW SIZES & ROUGH OPENINGS TO BE VERIFIED BY CONTRACTOR.
3. IF NOMINAL DOOR AND WINDOW HEIGHTS ARE SIMILAR, COORDINATE WITH DOOR AND WINDOW SPEC'S TO LOCATE FINAL ELEVATION OF THE HEAD HEIGHTS SO THAT ALL DOOR AND WINDOW TRIM ALIGN.
4. WINDOW AND DOOR SIZES ARE DIMENSIONED IN FEET AND INCHES (E.G. 2828= 2'-8"W X 2'-8"H)
5. EXTERIOR WALLS TO BE 2X6 STUDS PER STRUCTURAL, INTERIOR WALLS TO BE 2X4 STUDS PER STRUCTURAL.
6. FIREBLOCK ALL PLUMBING PENETRATIONS AND STAIR RUNS PER IRC SEC. R302.11.
7. ALL WOOD IN CONTACT WITH CONCRETE TO BE PRESSURE TREATED PER IRC SEC. R317.1.
8. PROVIDE UNDER-STAIR PROTECTION (1/2" GWB) PER IRC SEC R302.7.
9. PROVIDE (1) LAYER OF 1/2" GWB AT THE GARAGE SIDE OF ALL WALLS SEPARATING THE GARAGE FROM THE RESIDENCE, ALL WALLS SUPPORTING A FLOOR CEILING ASSEMBLY BETWEEN THE GARAGE AND RESIDENCE, AND BETWEEN THE GARAGE AND ITS ATTIC. PROVIDE (1) LAYER 5/8" TYPE X GWB TO GARAGE CEILING IF BELOW HABITABLE ROOMS.
10. HOUSE/GARAGE DOOR SHALL BE 1-⅜" THICK WOOD SOLID CORE, OR 1-⅜" THICK SOLID OR HONEYCOMB CORE STEEL DOOR, OR 20-MINUTE RATED FIRE DOOR. PROVIDE SELF-CLOSING DEVICE.
11. DUCTS IN THE GARAGE AND DUCTS PENETRATING THE WALLS AND CEILINGS SEPARATING THE DWELLING FROM THE GARAGE SHALL BE MIN. 26 GAUGE GALVANIZED STEEL.
12. PER IRC SEC R311.7.5. MAX. RISER HEIGHT SHALL BE 7-3/4". MIN. TREAD DEPTH SHALL BE 10". STAIR NOSINGS: 3/4" MIN., 1-1/4" MAX. RADIUS @ LEADING EDGE OF TREAD: 9/16" MAX
13. PROVIDE HANDRAILS PER IRC SEC. R311.7.8. TOP OF HANDRAIL SHALL BE NOT LESS THAN 34" OR MORE THAN 38" ABOVE THE TREAD NOSINGS. HANDRAILS SHALL BE CONTINUOUS THE FULL LENGTH OF THE FLIGHT PER R311.7.8.2. THE HANDRAIL GRIP-SIZE SHALL BE PROVIDED PER R311.7.8.3.
14. PROVIDE GUARDS (MIN. 36" HEIGHT) IN LOCATIONS PER IRC SEC. R312.
15. FACTORY BUILT FIREPLACES & CHIMNEYS SHALL BE LISTED & LABELED AND SHALL BE INSTALLED & TERMINATED IN ACCORDANCE TO THE CONDITIONS OF THE LISTINGS. FACTORY BUILT FIREPLACES SHALL MEET EMISSION STANDARDS PER CH. 51-51 WAC R1004.1.1.
16. PROVIDE EXTERIOR AIR SUPPLY TO ANY FACTORY-BUILT FIREPLACE PER IRC SEC R1006.
17. WATER HEATERS SHALL COMPLY WITH THE REQUIREMENTS OF THE IRC CH. 20 AND 28

17.1. INSTALL PER MANUFACTURERS SPECIFICATIONS, PROVIDING ALL SPECIFIED CLEARANCES & VENTILATION.

17.2. WATER HEATERS SHALL BE ANCHORED OR STRAPPED IN THE UPPER ONE-THIRD AND IN THE LOWER ONE-THIRD OF THE APPLIANCE.

18. ALL SHOWER AND TUB FIXTURES TO HAVE THERMOSTATIC CONTROL W/ 120° F. MAX. SETTING FOR THERMAL PROTECTION PER UPC 408.3 & 409.4.
19. ALL SKYLIGHTS TO PROVIDE LAMINATED GLASS WITH NOT LESS THAN 0.030" (0.76MM) POLYVINYL BUTYRAL INTERLAYER PER R308.6.2, TYP.

PLAN KEY:

110V S.D. — INDICATES 110V SMOKE DET. PER I.R.C. 314.3 INTERCONNECTED W/ EMERGENCY BATTERY BACKUP

CO ALARM — INDICATES CARBON MONOXIDE ALARM PER I.R.C. R315.1

(MAY BE COMBINED)

FAN V.T.O. — INDICATES EXHAUST VENTILATION FAN. SEE "LOCAL EXHAUST" ON COVER SHEET FOR ADDITIONAL INFORMATION.

SW — INDICATES SHEAR WALL PER STRUCTURAL. SEE "TYPICAL EXTERIOR WALL SHEATHING SPECIFICATIONS" ON SHEET S-0.0.

HD_ — INDICATES HOLD DOWN PER STRUCTURAL NOTES, S-0.0

S.G. — SAFETY GLASS REQUIRED PER IRC R308

STRUCTURAL NOTES:

1. PROVIDE 7/16" OSB & SHEATH PER TYP. EXT. SHEATHING SPEC. (SEE NOTES)
2. PROVIDE SLOPING 2X HF #2 @ 16" O.C. B.F. EXT. WALL TIGHT TO UNDERSIDE OF ROOF FRAMING, TYP., U.N.O.
3. PROVIDE CS16 STRAP FROM DROPPED GLB TO DOUBLE TOP PLATE. PROVIDE 13" MIN. END LENGTH ON BM. & DBL. TOP PLATE.
4. PROVIDE CS16 STRAP FROM DROPPED GLB TO DOUBLE TOP PLATE @ INT. SHEARWALL. PROVIDE 13" MIN. END LENGTH ON BM. & DBL. TOP PLATE.
5. PROVIDE CS16 STRAP FROM DOUBLE TOP PLATE TO FLUSH BEAM. PROVIDE 13" MIN. END LENGTH ON BM. & DBL. TOP PLATE.
6. PROVIDE CS16 STRAP FROM DOUBLE TOP PLATE TO UNDERSIDE OF FULL DEPTH BLOCKING BETWEEN DECK JOISTS. PROVIDE BLOCKING FIRST 3 BAYS OR 4'-0" MIN. PROVIDE 13" MIN. END LENGTH ON DBL. TOP PLATE.
7. PROVIDE CS16 STRAP FROM TOP OF FLUSH BEAM TO UNDERSIDE OF FULL DEPTH BLOCKING BETWEEN R.T. BOTTOM CHORDS. PROVIDE BLOCKING FIRST 3 BAYS OR 6'-0" MIN. PROVIDE 13" MIN. END LENGTH ON DBL. FLUSH BEAM.

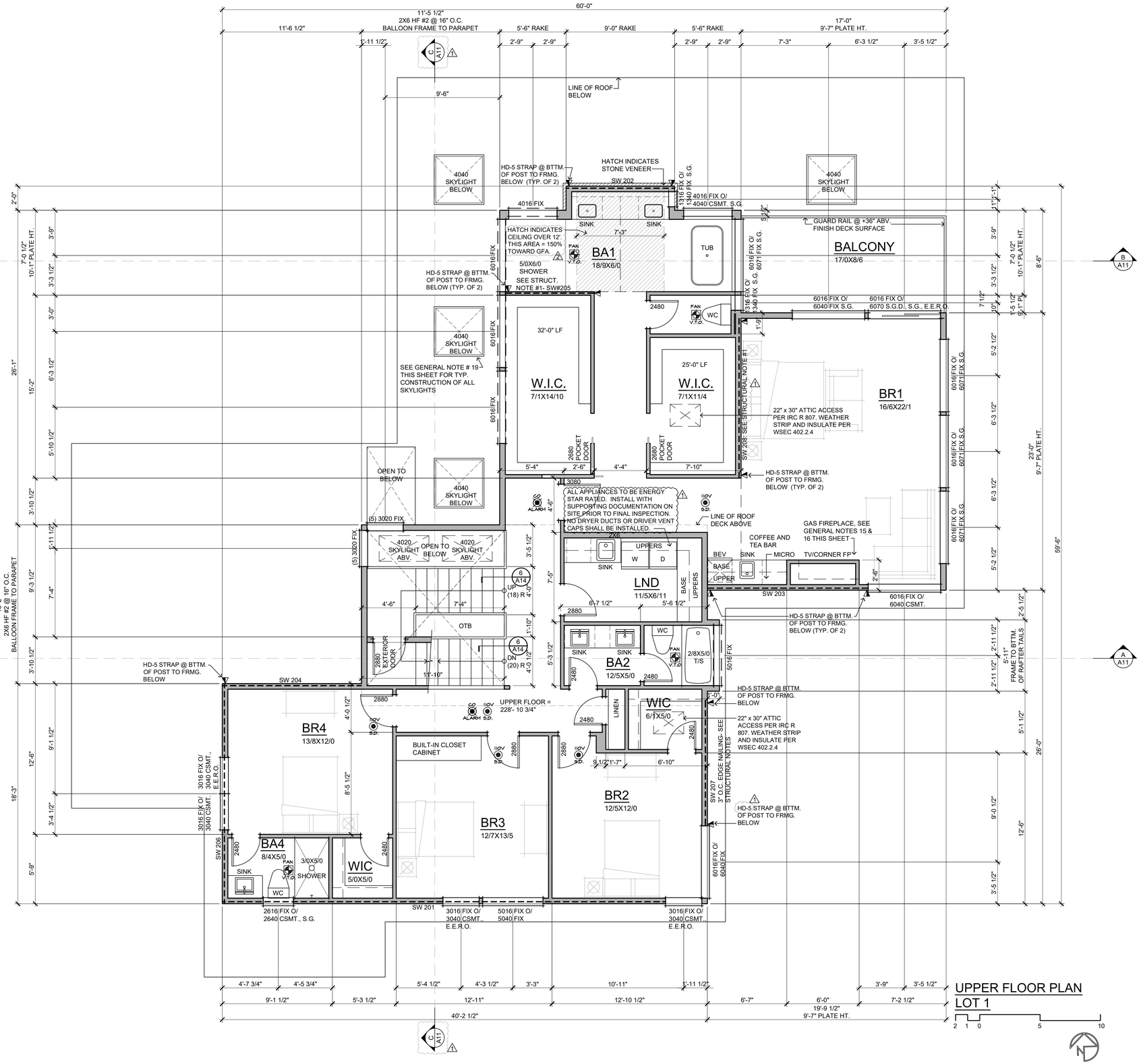

MCCULLOUGH ARCHITECTS
5601 6th Ave S, Suite 371
Seattle, WA 98108
206.443.1181
mccullougharchitects.com

UNPUBLISHED WORK 2022 © McCullough Architects

Revisions	Comment
2022.05.03	permit response
2022.11.14	permit response

Date: 2021.05.10
Job No: 19-034
Project No: 00000
Drawn: MCG
Approved: APM

Owner:
PREMIUM HOMES
IN MERCER ISLAND LLC

REGISTERED ARCHITECT 7605 PHILIP A. MCCULLOUGH STATE OF WASHINGTON

LOT 1

7216 93rd AVE. SE
MERCER ISLAND, WA 98040

Permit Submittal Set

Upper Floor Plan

A7

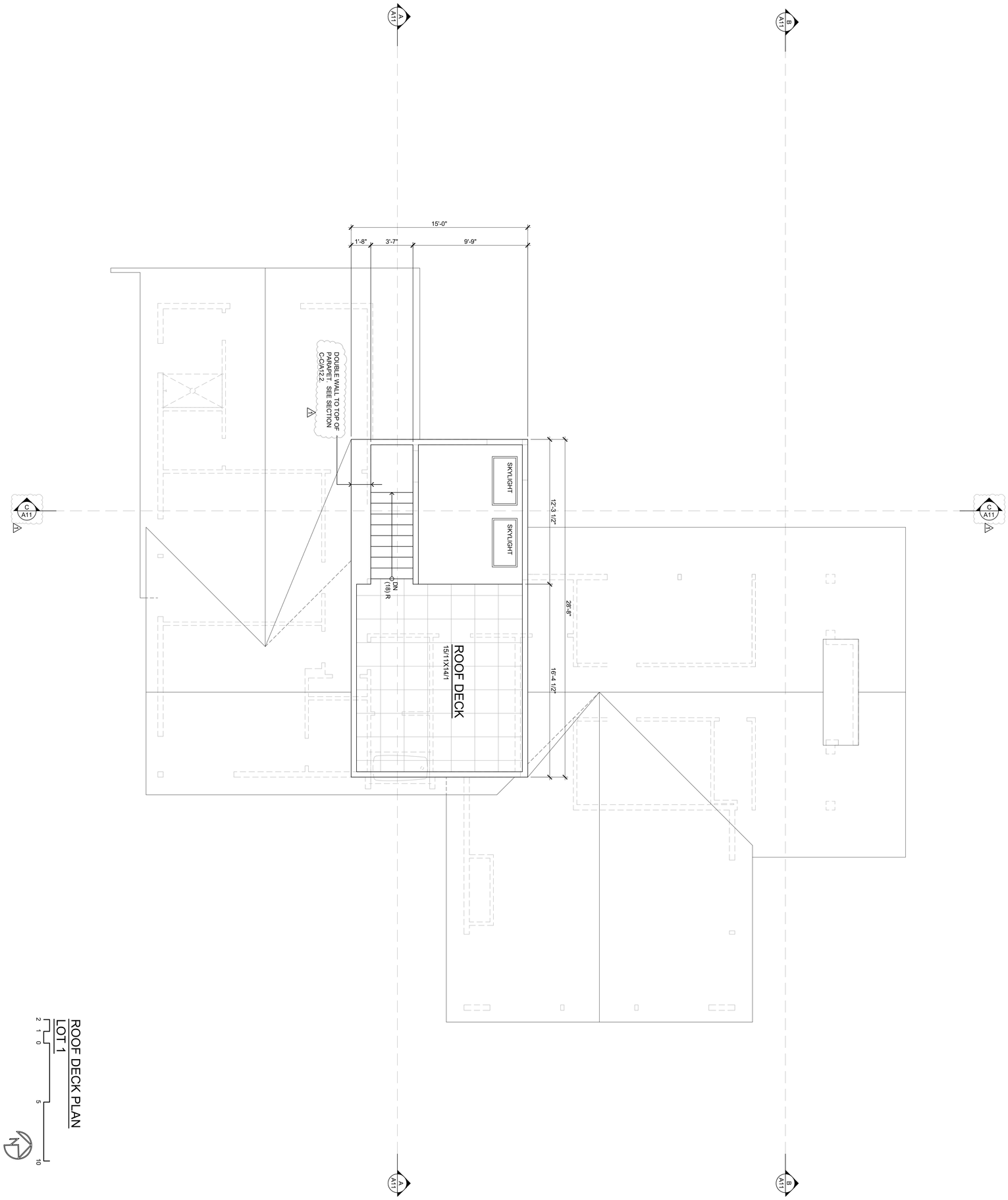

ROOF DECK PLAN
LOT 1

2 1 0 5 10

Permit Submittal Set

A8

Roof Deck Plan

LOT 1

7216 93rd AVE. SE
MERCER ISLAND, WA 98040

7806 REGISTERED ARCHITECT PHILIP MCCULLOUGH STATE OF WASHINGTON

Date:	**2021.05.10**
Job No:	**19-034**
Project No:	**00000**
Drawn:	**MCG**
Approved:	**APM**

Owner:
PREMIUM HOMES
IN MERCER ISLAND LLC

Revisions	Comment
2022.05.03	**permit response** 1
2022.11.14	**permit response** 2

MCCULLOUGH
ARCHITECTS

5601 6th Ave S, Suite 371
Seattle, WA 98108
206.443.1181
mccullougharchitects.com

UNPUBLISHED WORK 2022 © McCullough Architects

GENERAL NOTES:
1. VENTED EAVE BLOCKING NOT ALLOWED.
2. BEARING WALLS ARE SHADED.
3. OVER FRAME ROOF AREAS ARE SHOWN HATCHED.
4. ROOF PITCH AS INDICATED ON PLAN.
5. EAVE & RAKE OVERHANG PER PLAN. APPLY ROOFING IN ACCORDANCE WITH I.R.C. SEC. 905. PROVIDE DRIP EDGE PER R905.2.8.5.
6. COMPOSITION ROOF FASTENERS AS PER I.R.C. SEC. 905.2.5.
7. PROVIDE ATTIC ACCESS WITH MIN. OF 22"X30" CLEAR, INSULATE & WEATHERSTRIP.
8. JOIST LAYOUT TO BE REVIEWED AND APPROVED BY JOIST MANUFACTURER PRIOR TO CONSTRUCTION. ALL CHANGES TO BE SUBMITTED AND APPROVED BY ARCHITECT PRIOR TO FABRICATION.
9. HEADERS (HDR.) TO BE 4X10 TYP., U.N.O. (SEE STRUCTURAL B1). FILL CAVITIES WITH R-10 RIGID INSULATION.
10. COLUMNS @ HEADERS, BEAMS, & GIRDERS TO BE (2) 2X STUDS (U.N.O.)

⊠ INDICATES LOC. OF SOLID SUPPORT (2) STUDS LAM'D W/ 16d @ 12" O.C., (2) 16d EA. END TYP. UNLESS NOTED OTHERWISE

A.S.F. =ABOVE (TOP OF) SUBFLOOR

B.F. =BALLOON FRAMED

HATCH INDICATES OVERFRAMED AREA

STRUCTURAL NOTES:
1. PROVIDE 7/16" OSB & SHEATH PER TYP. EXT. SHEATHING SPEC. (SEE NOTES)
2. PROVIDE SLOPING 2X HF #2 @ 16" O.C. B.F. EXT. WALL TIGHT TO UNDERSIDE OF ROOF FRAMING, TYP., U.N.O.
3. PROVIDE CS16 STRAP FROM DROPPED GLB TO DOUBLE TOP PLATE. PROVIDE 13" MIN. END LENGTH ON BM. & DBL. TOP PLATE.
4. PROVIDE CS16 STRAP FROM DROPPED GLB TO DOUBLE TOP PLATE @ INT. SHEARWALL. PROVIDE 13" MIN. END LENGTH ON BM. & DBL. TOP PLATE.
5. PROVIDE CS16 STRAP FROM DOUBLE TOP PLATE TO FLUSH BEAM. PROVIDE 13" MIN. END LENGTH ON BM. & DBL. TOP PLATE.
6. PROVIDE CS16 STRAP FROM *END BLOCKING PANEL* TO UNDERSIDE OF FULL DEPTH BLOCKING BETWEEN DECK JOISTS. PROVIDE BLOCKING *6'-0" MIN.* PROVIDE 13" MIN. END LENGTH ON *END BLOCKING PANEL.*
7. PROVIDE CS16 STRAP FROM TOP OF FLUSH BEAM TO UNDERSIDE OF FULL DEPTH BLOCKING BETWEEN R.T. BOTTOM CHORDS. PROVIDE BLOCKING *6'-0" MIN.* PROVIDE 13" MIN. END LENGTH ON DBL. FLUSH BEAM.
8. PROVIDE 2X6 @ 16" O.C. KNEEWALL FOR CHIMNEY BOX ABOVE ROOF. PROVIDE 2X FLAT BLOCKING BETWEEN ROOF RAFTERS & FASTEN SOLE PLATE TO BLOCKING W/ (2) 1/4"X3 1/2" SIMPSON SDS SCREWS @ 6" O.C.
9. ALL WOOD MEMBERS EXPOSED TO WEATHER SHALL BE NATURALLY DECAY RESISTANT OR PRESERVATIVE TREATED.
10. PROVIDE 2X BLOCKING BETWEEN R.T. TOP CHORDS AT ALL RIDGE VENT LOCATIONS. FASTEN ROOF SHEATHING TO BLOCKING WITH 3"X0.131" NAILS @ 6" O.C. (TYP.)
11. PROVIDE CS16 STRAP FROM DOUBLE TOP PLATE TO UNDERSIDE OF ROOF DRAG TRUSS. PROVIDE 13" MIN. END LENGTH ON DOUBLE TOP PLATE AND TRUSS.
12. PROVIDE CS16 STRAP FROM TOP OF FLUSH BEAM TO UNDERSIDE OF FULL DEPTH BLOCKING BETWEEN DECK JOIST. PROVIDE 13" MIN. END LENGTH ON BEAM. INSTALL BLOCKING 6'-0" MIN.

IRC SECTION R806 - ROOF VENTILATION
THE NET FREE VENTILATING AREA SHALL NOT BE LESS THAN 1/150 OF THE AREA OF SPACE TO BE VENTILATED, EXCEPT THAT THE AREA MAY BE 1/300, PROVIDED AT LEAST 40% AND NOT MORE THAN 50% OF THE REQUIRED VENTILATING AREA IS PROVIDED BY VENTILATORS LOCATED IN THE UPPER PORTION OF THE ATTIC OR RAFTER SPACE. UPPER VENTILATORS SHALL BE LOCATED NO MORE THAN 3 FEET BELOW THE RIDGE OR HIGHEST POINT OF THE SPACE WITH THE BALANCE OF THE REQUIRED VENTILATION PROVIDED BY EAVE VENTS. THE OPENINGS SHALL BE COVERED WITH CORROSION-RESISTANT METAL MESH WITH MESH OPENINGS OF 1/16" MIN. & 1/4" MAX. IN DIMENSION. PROVIDE CROSS VENTILATION FOR EACH SEPARATE SPACE OF ENCLOSED ATTIC OR RAFTER SPACE. PROVIDE MIN. 1" CLEARANCE BETWEEN INSULATION AND ROOF SHEATHING.

VENT AREA #1 = 946 S.F. / 300 = 3.2 S.F. REQUIRED VENT AREA

RIDGE VENTING:
RIDGE VENTING TO PROVIDE 13.5 SQ. INCHES NFVA OR 0.094 SQ. FT. PER LINEAL FOOT
ALL RIDGES OVER HEATED SPACE TO RECEIVE VENTED RIDGE, FOR A TOTAL OF 55' LINEAL FEET
X 0.094 S.F. = 5.17 S.F. VENT AREA PROVIDED AT RIDGES

ALL EAVES TO RECEIVE VENTED BLOCKING. SEE ARCHITECTURAL ROOF DETAILS.

VENT AREA #2 = 681 S.F. / 300 = 2.3 S.F. REQUIRED VENT AREA

RIDGE VENTING:
RIDGE VENTING TO PROVIDE 13.5 SQ. INCHES NFVA OR 0.094 SQ. FT. PER LINEAL FOOT
ALL RIDGES OVER HEATED SPACE TO RECEIVE VENTED RIDGE, FOR A TOTAL OF 45' LINEAL FEET
X 0.094 S.F. = 4.23 S.F. VENT AREA PROVIDED AT RIDGES

ALL EAVES TO RECEIVE VENTED BLOCKING. SEE ARCHITECTURAL ROOF DETAILS.

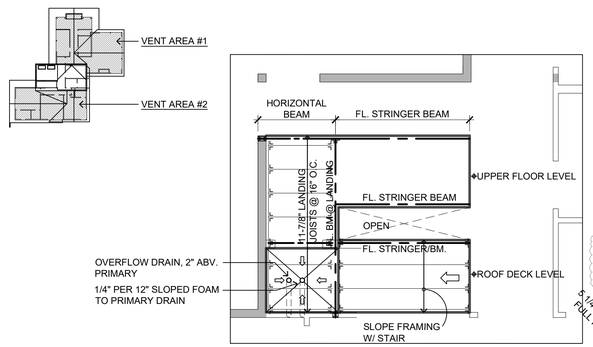

STAIR FRAMING
PULLED OUT FOR CLARITY

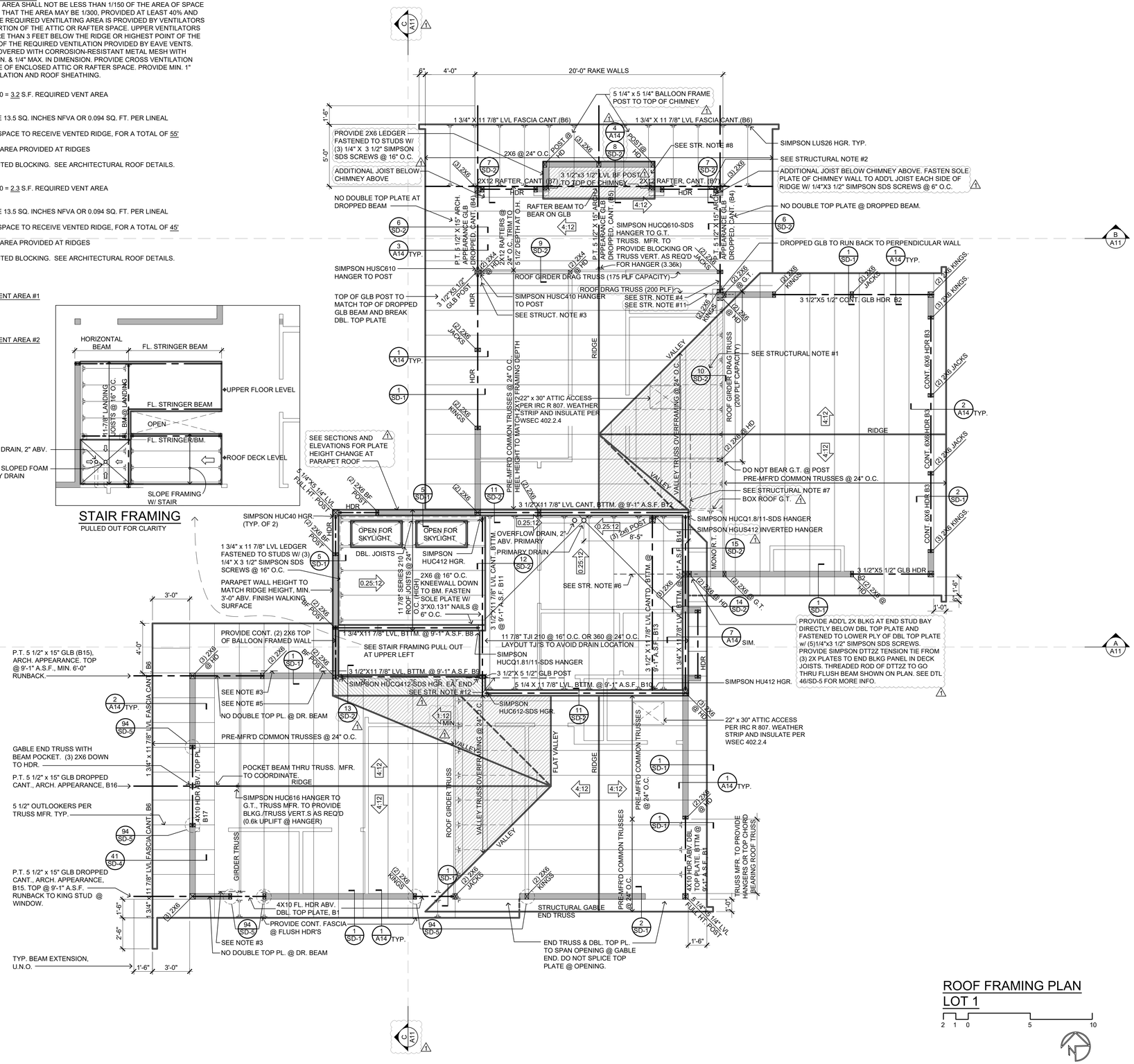

ROOF FRAMING PLAN
LOT 1
2 1 0 5 10

MCCULLOUGH ARCHITECTS
5601 6th Ave S, Suite 371
Seattle, WA 98108
206.443.1181
mccullougharchitects.com

UNPUBLISHED WORK 2022 © McCullough Architects

Revisions	Comment
2022.05.03	permit response
2022.11.14	permit response

Date: 2021.05.10
Job No: 19-034
Project No: 00000
Drawn: MCG
Approved: APM

Owner:
PREMIUM HOMES
IN MERCER ISLAND LLC

REGISTERED ARCHITECT T. PHILIP MCCULLOUGH STATE OF WASHINGTON 7806

LOT 1
7216 93rd AVE. SE
MERCER ISLAND, WA 98040

Permit Submittal Set

Roof Framing Plan

A9

EXTERIOR ELEVATION NOTES:
1. VERIFY SHEAR WALL NAILING AND HOLDDOWNS PER STRUCTURAL PLANS AND SCHEDULES PRIOR TO INSTALLING SIDING
2. THE BUILDING ENVELOPE SHALL BE SEALED, CAULKED, GASKETED, AND WEATHERSTRIPPED TO LIMIT AIR LEAKAGE.
3. PROVIDE GALVANIZED OR ANODIZED SHEET METAL FLASHING AND COUNTERFLASHING AT ALL ROOF PENETRATIONS, CHIMNEYS, AND SKYLIGHTS PER IRC SEC. R703.8.
4. PROVIDE CONTINUOUS GUTTERS WITH DOWNSPOUTS AT ALL EAVES, U.N.O.
5. PROVIDE ROOF COVERINGS PER IRC SECTION R905. INSTALL PER MANUFACTURER'S WRITTEN SPECIFICATIONS.
6. PROVIDE EXTERIOR WALL COVERINGS PER IRC SECTION R703. INSTALL PER MANUFACTURER'S WRITTEN SPECIFICATIONS.

WINDOW & DOOR NOTES:
1. UNIT FRAMES TO BE F.G., U.N.O.
2. "U" VALUES FOR WINDOWS TO BE NFRC CERTIFIED.
3. GLAZING UNITS TO HAVE INSULTED GLASS PER COVER SHEET, U.N.O.
4. USE SAFETY GLASS WHERE REQUIRED PER IRC SEC. R308.4
5. WINDOWS & DOORS SHALL LIMIT INFILTRATION PER ASTM 32873.
6. SITE VERIFY ALL ROUGH OPENING DIMENSIONS PRIOR TO FABRICATION.

NORTH ELEVATION

2 1 0 5 10

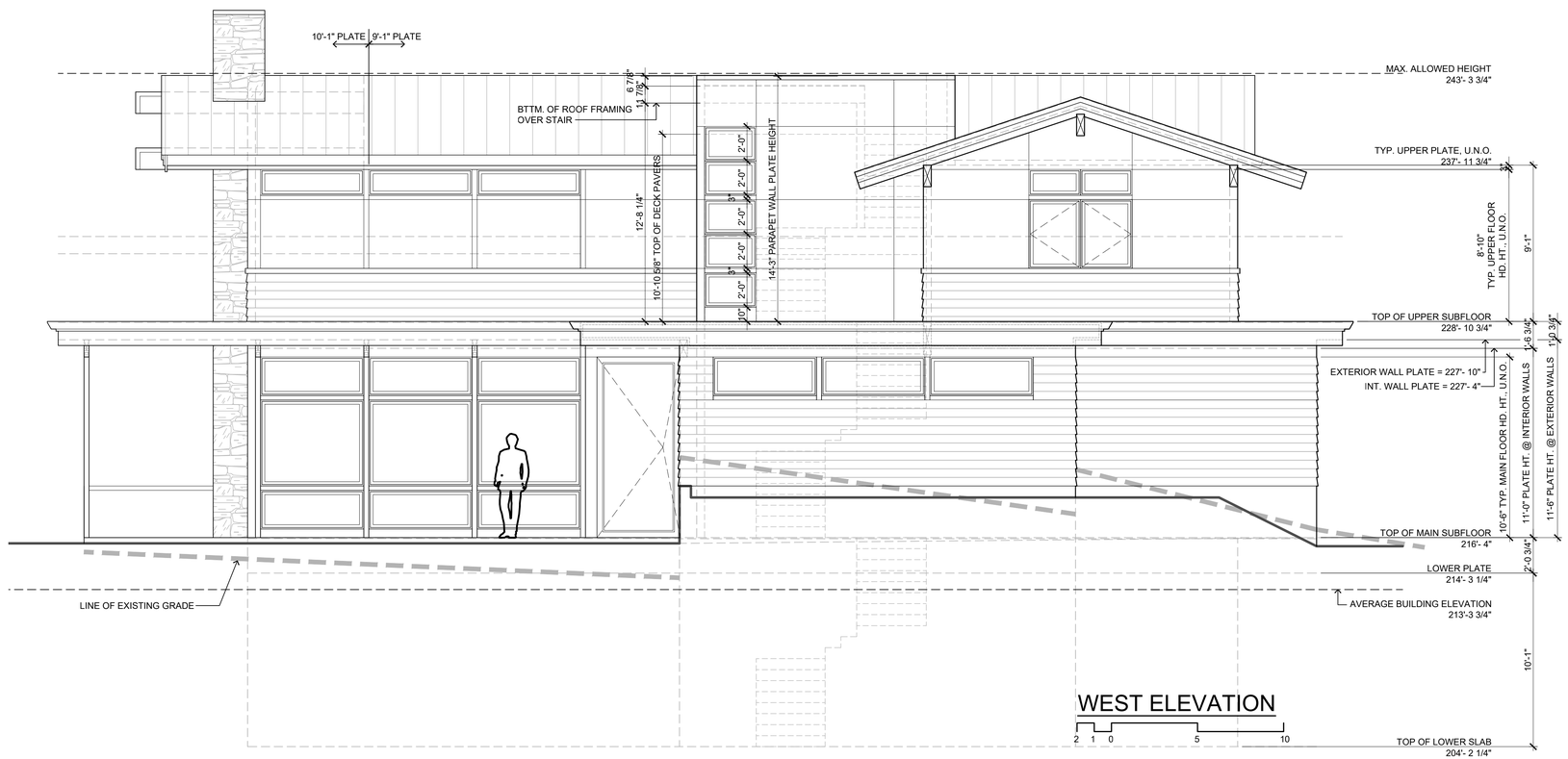

WEST ELEVATION

2 1 0 5 10

MCCULLOUGH ARCHITECTS
5601 6th Ave S, Suite 371
Seattle, WA 98108
206.443.1181
mccullougharchitects.com

UNPUBLISHED WORK 2022 © McCullough Architects

Revisions	Comment
2022.05.03	permit response
2022.11.14	permit response

Date: 2021.05.10
Job No: 19-034
Project No: 00000
Drawn: MCG
Approved: APM

Owner:
PREMIUM HOMES
IN MERCER ISLAND LLC

7806 REGISTERED ARCHITECT PHILIP MCCULLOUGH STATE OF WASHINGTON

LOT 1

7216 93rd AVE. SE
MERCER ISLAND, WA 98040

Permit Submittal Set

Elevations

A10

EXTERIOR ELEVATION NOTES:
1. VERIFY SHEAR WALL NAILING AND HOLDDOWNS PER STRUCTURAL PLANS AND SCHEDULES PRIOR TO INSTALLING SIDING
2. THE BUILDING ENVELOPE SHALL BE SEALED, CAULKED, GASKETED, AND WEATHERSTRIPPED TO LIMIT AIR LEAKAGE.
3. PROVIDE GALVANIZED OR ANODIZED SHEET METAL FLASHING AND COUNTERFLASHING AT ALL ROOF PENETRATIONS, CHIMNEYS, AND SKYLIGHTS PER IRC SEC. R703.8.
4. PROVIDE CONTINUOUS GUTTERS WITH DOWNSPOUTS AT ALL EAVES, U.N.O.
5. PROVIDE ROOF COVERINGS PER IRC SECTION R905. INSTALL PER MANUFACTURER'S WRITTEN SPECIFICATIONS.
6. PROVIDE EXTERIOR WALL COVERINGS PER IRC SECTION R703. INSTALL PER MANUFACTURER'S WRITTEN SPECIFICATIONS.

WINDOW & DOOR NOTES:
1. UNIT FRAMES TO BE F.G., U.N.O.
2. "U" VALUES FOR WINDOWS TO BE NFRC CERTIFIED.
3. GLAZING UNITS TO HAVE INSULTED GLASS PER COVER SHEET, U.N.O.
4. USE SAFETY GLASS WHERE REQUIRED PER IRC SEC. R308.4
5. WINDOWS & DOORS SHALL LIMIT INFILTRATION PER ASTM 32873.
6. SITE VERIFY ALL ROUGH OPENING DIMENSIONS PRIOR TO FABRICATION.

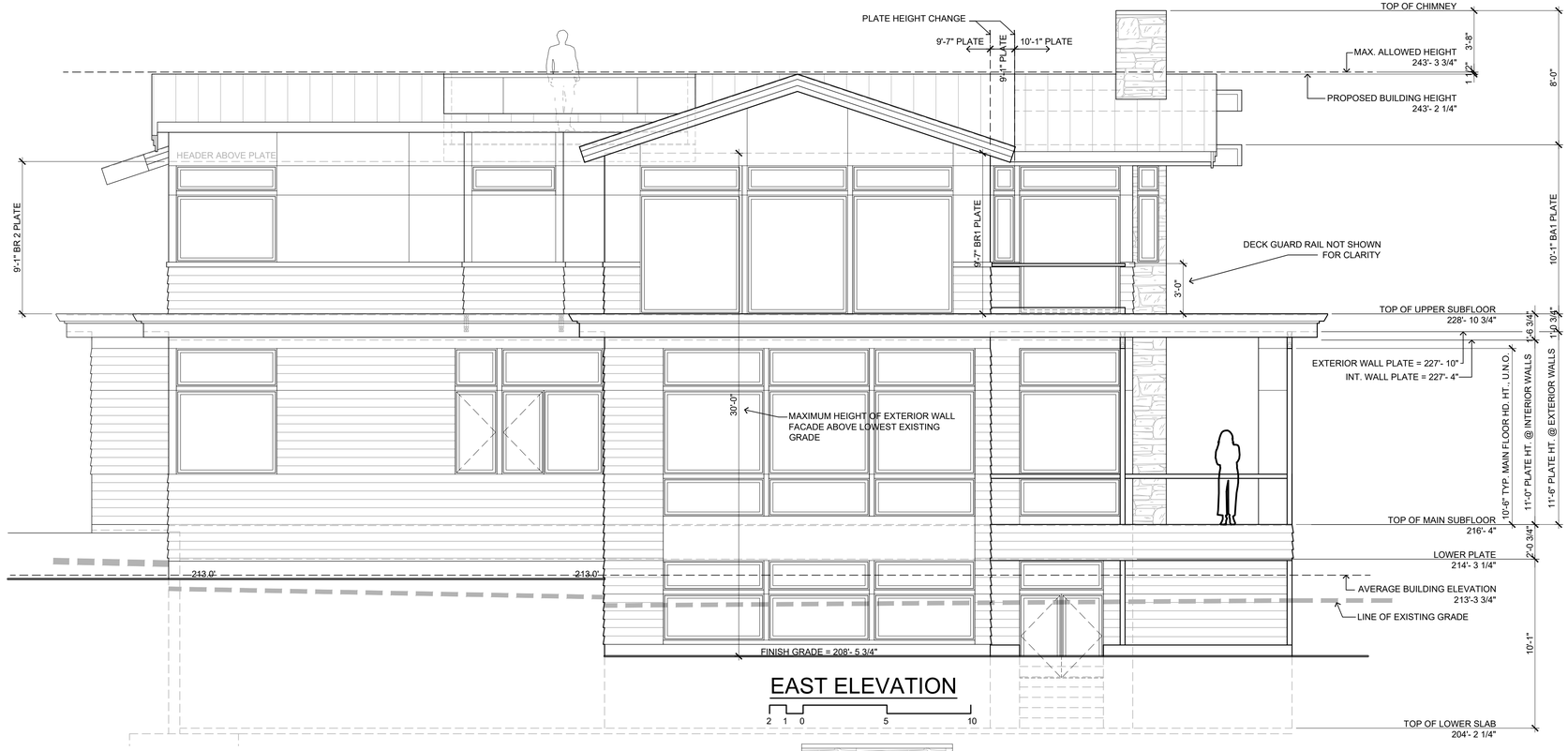

EAST ELEVATION

2 1 0 5 10

SOUTH ELEVATION

2 1 0 5 10

MCCULLOUGH ARCHITECTS
5601 6th Ave S, Suite 371
Seattle, WA 98108
206.443.1181
mccullougharchitects.com

UNPUBLISHED WORK 2022 © McCullough Architects

Revisions	Comment
2022.05.03	permit response
2022.11.14	permit response

Date: 2021.05.10
Job No: 19-034
Project No: 00000
Drawn: MCG
Approved: APM

Owner:
PREMIUM HOMES
IN MERCER ISLAND LLC

7605 REGISTERED ARCHITECT PHILIP MCCULLOUGH STATE OF WASHINGTON

LOT 1

7216 93rd AVE. SE
MERCER ISLAND, WA 98040

Permit Submittal Set

Elevations

A11

TYPICAL SLOPED ROOF CONSTRUCTION*:
-STANDING SEAM METAL ROOF
-(2) LAYERS ASPHALT SATURATED FELT OR SYNTHETIC UNDERLAYMENT
-SHEATHING PER STRUCTURAL NOTES
-FRAMING PER PLANS
-INSULATION PER COVER SHEET
-5/8" GWB CEILING

*AT UNVENTED ROOFS WHERE LOCATED PER ROOF PLAN: 3" SPRAY FOAM INSUL. @ BOTTOM SIDE OF ROOF SHTG. FILL REMAINDER w/ BATT INSUL. NO PVA PRIMER ALLOWED @ UNVENTED ASSEMBLY PER R806.5

TYPICAL FLAT ROOF CONSTRUCTION*:
(WHERE OCCURS)
-MEMBRANE ROOFING
-SHEATHING PER STRUCTURAL NOTES
-FRAMING PER STRUCTURAL
-INSULATION PER COVER SHEET
-5/8" GWB CEILING

TYPICAL EXTERIOR WALL:
-SIDING PER ELEVATION
-WEATHER RESISTIVE BARRIER -SHEATHING PER STRUCTURAL NOTES
-2X6 STUDS PER STRUCTURAL NOTES
-INSULATION PER COVER SHEET
-1/2" G.W.B. INTERIOR FINISH

TYPICAL INTERIOR WALL:
(WHERE OCCURS)
1/2" G.W.B. FINISH
2x STUDS PER STRUCT.
1/2" G.W.B. FINISH

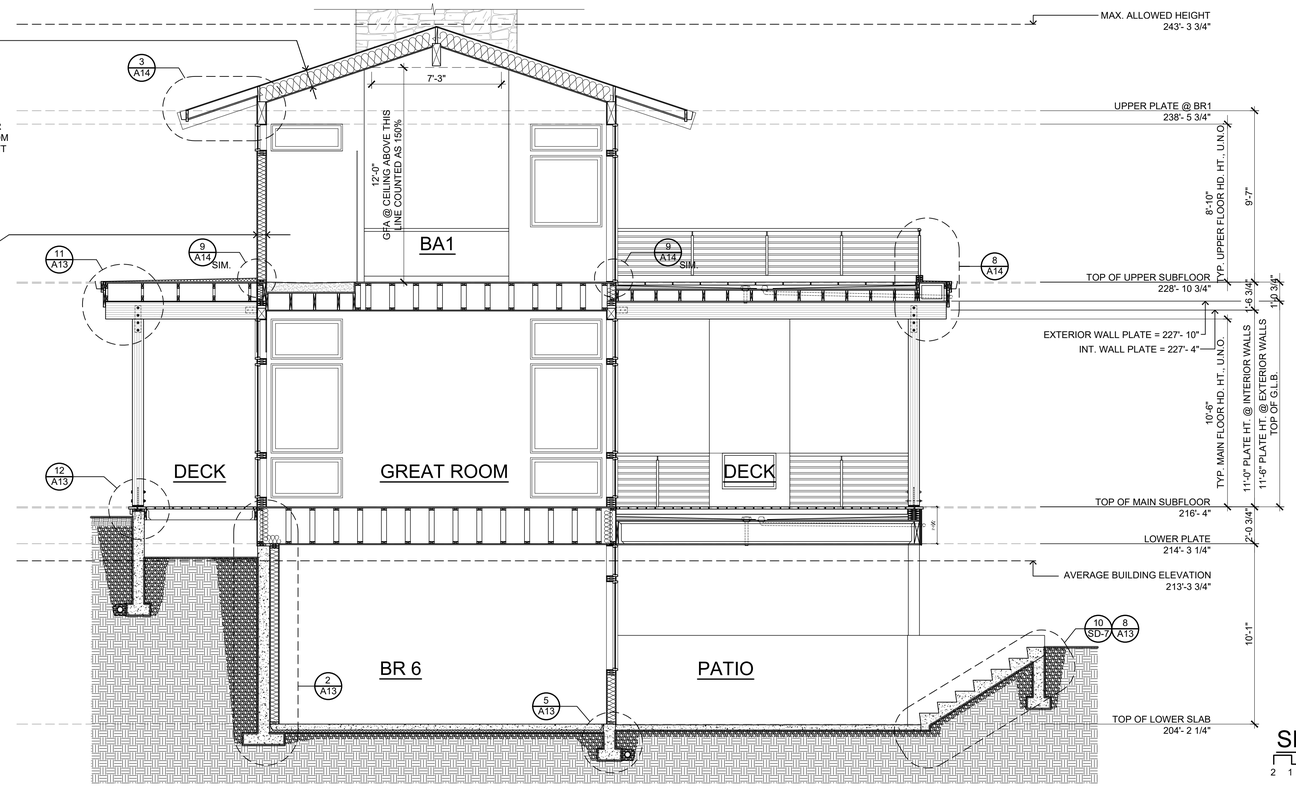

SECTION B-B

2 1 0 5 10

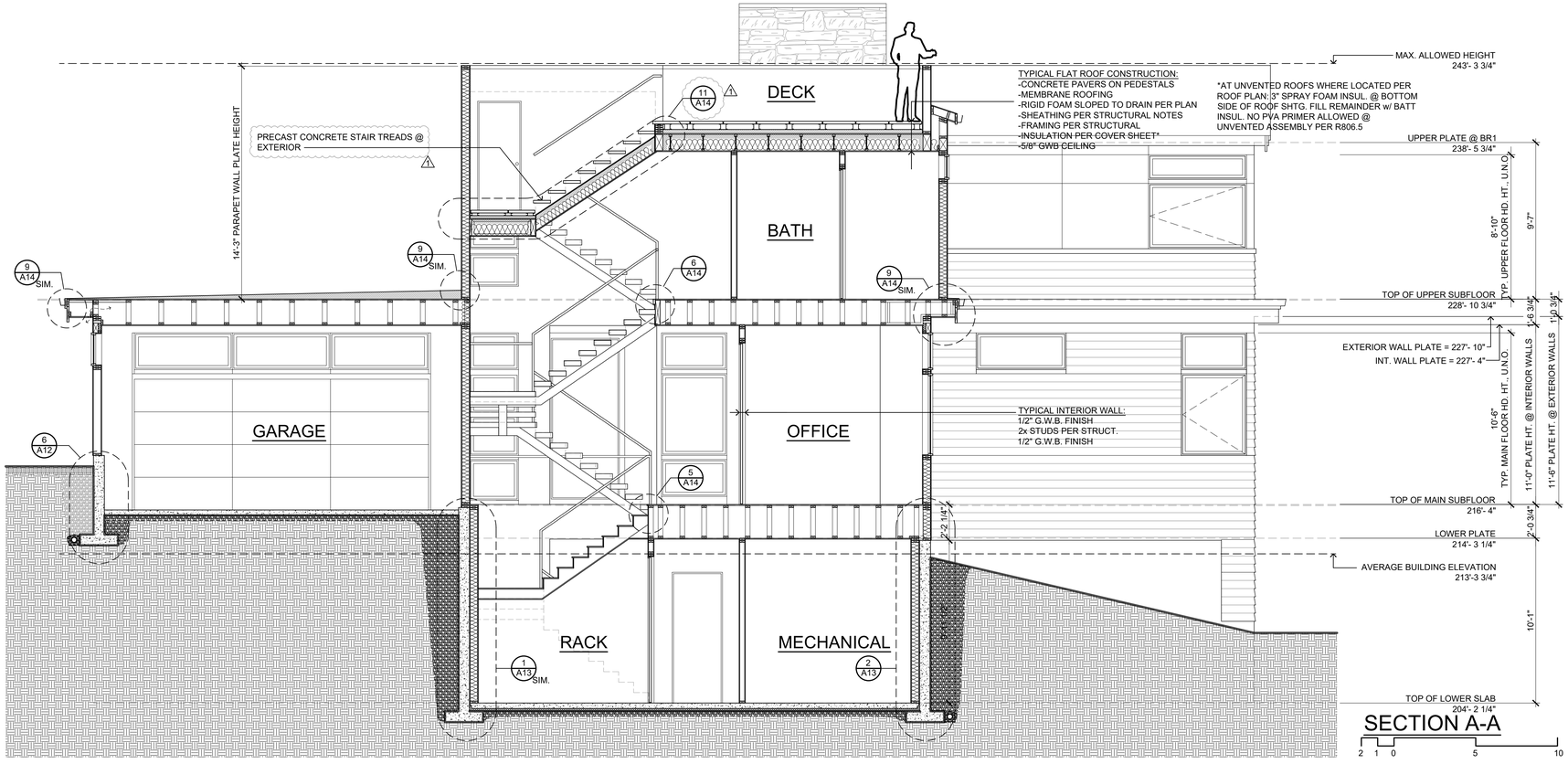

SECTION A-A

2 1 0 5 10

MCCULLOUGH ARCHITECTS
5601 6th Ave S, Suite 371
Seattle, WA 98108
206.443.1181
mcculloughrchitects.com

UNPUBLISHED WORK 2022 © McCullough Architects

Revisions	Comment
2022.05.03	permit response
2022.11.14	permit response

Date: 2021.05.10
Job No: 19-034
Project No: 00000
Drawn: MCG
Approved: APM

Owner:
PREMIUM HOMES
IN MERCER ISLAND LLC

REGISTERED ARCHITECT PHILIP A. MCCULLOUGH STATE OF WASHINGTON 7806

LOT 1

7216 93rd AVE. SE
MERCER ISLAND, WA 98040

Permit Submittal Set

Sections

A12.1

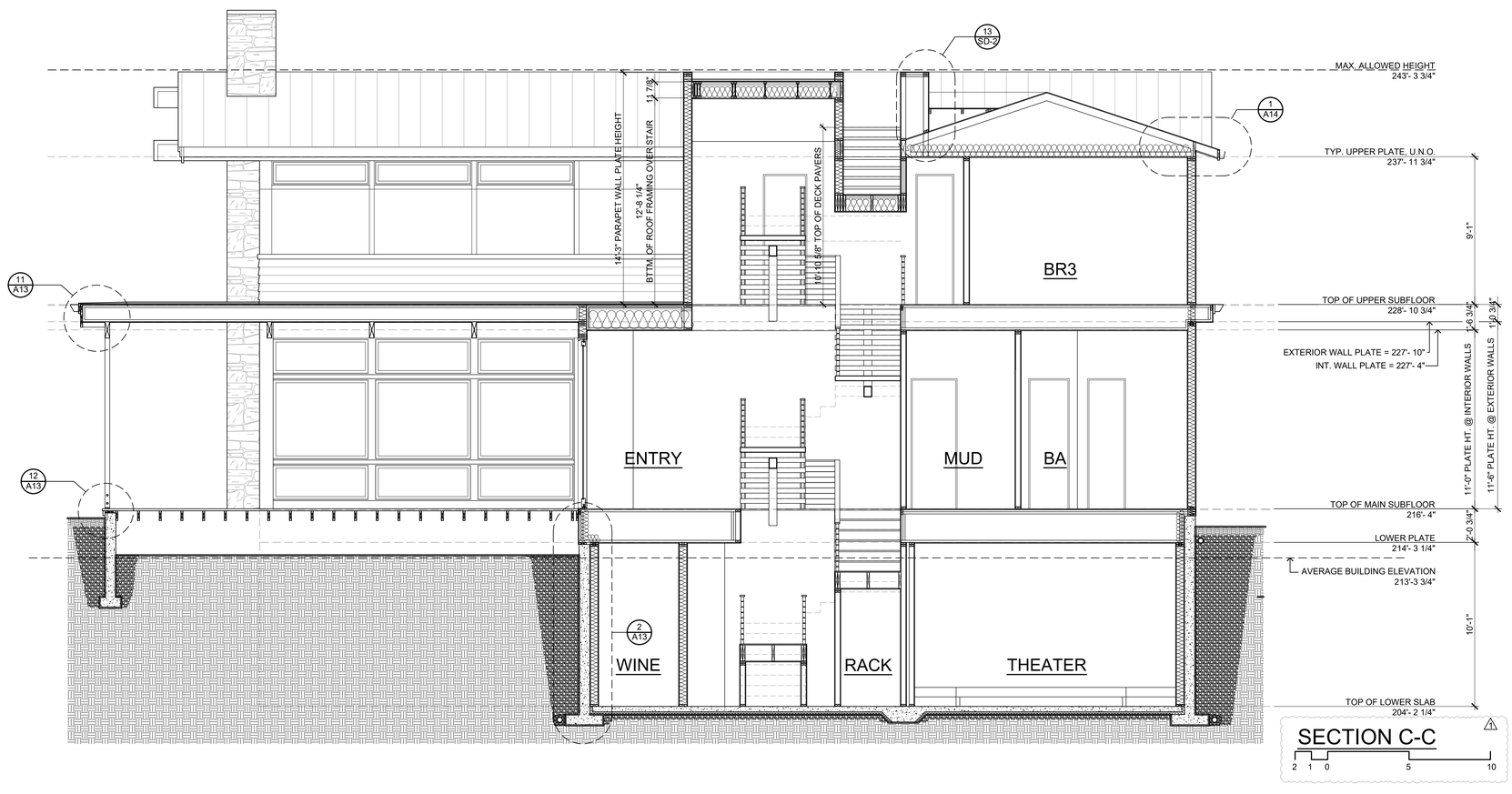

Date: 2021.05.10
Job No: 19-034
Project No: 00000
Drawn: MCG
Approved: APM

Owner:
PREMIUM HOMES
IN MERCER ISLAND LLC

Revisions Comment
2022.05.03 permit response 1
2022.11.14 permit response 2

MCCULLOUGH
ARCHITECTS

5601 6th Ave S, Suite 371
Seattle, WA 98108
206.443.1181
mccullougharchitects.com

UNPUBLISHED WORK 2022 © McCullough Architects

7806 REGISTERED PROFESSIONAL ARCHITECT PHILIP A. MCCULLOUGH STATE OF WASHINGTON

LOT 1

7216 93rd AVE. SE
MERCER ISLAND, WA 98040

Permit Submittal Set

Sections

A12.2

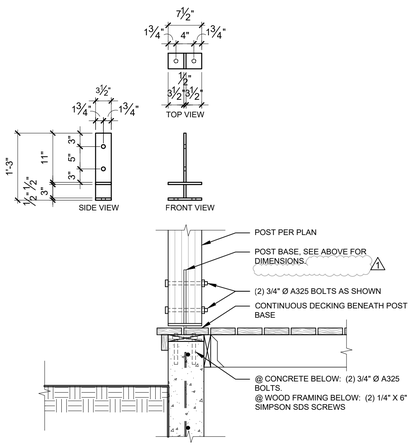

DECK/STEM WALL/POST BASE (12)

SCALE: 3/4" = 1'-0"

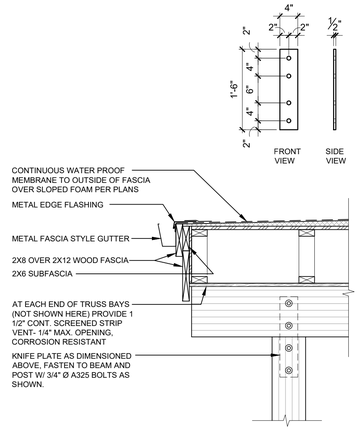

KNIFE PLATE/ FLAT ROOF EDGE (11)

SCALE: 3/4" = 1'-0"

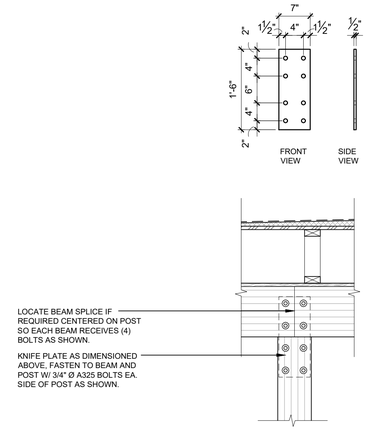

KNIFE PLATE @ BEAM SPLICE (10)

SCALE: 3/4" = 1'-0"

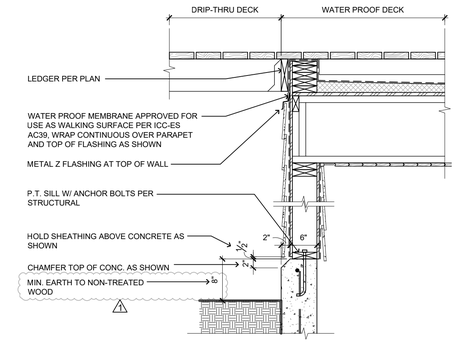

WATER PROOF TO DRIP DECK (9)

SCALE: 3/4" = 1'-0"

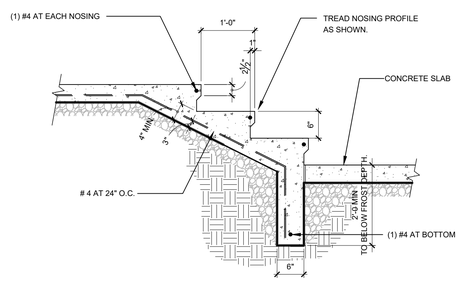

TYP. STEPS ON GRADE (8)

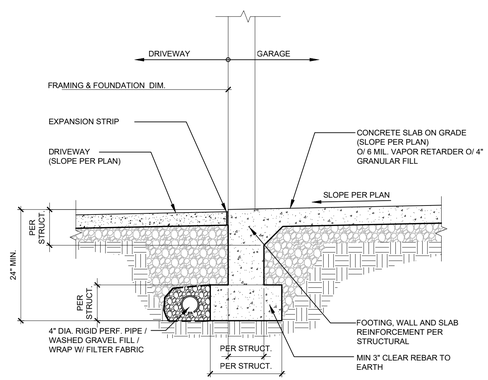

FOUNDATION @ GARAGE DOOR (7)

SCALE: 3/4" = 1'-0"

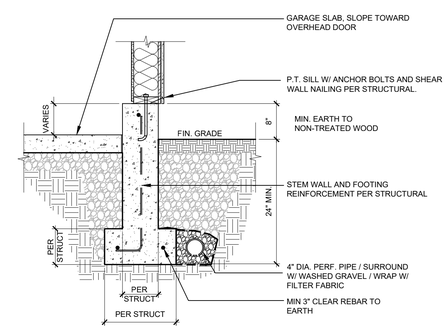

FOUNDATION @ GARAGE WALL (6)

SCALE: 3/4" = 1'-0"

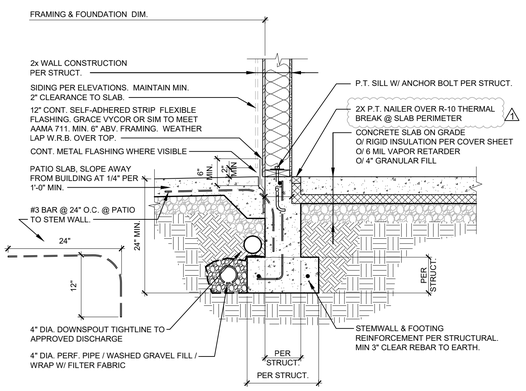

FOUNDATION @ SLAB/PATIO (5)

SCALE: 3/4" = 1'-0"

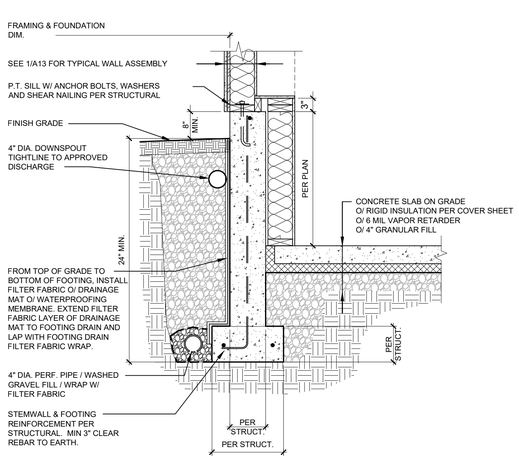

BASEMENT WALL (4)

SCALE: 3/4" = 1'-0"

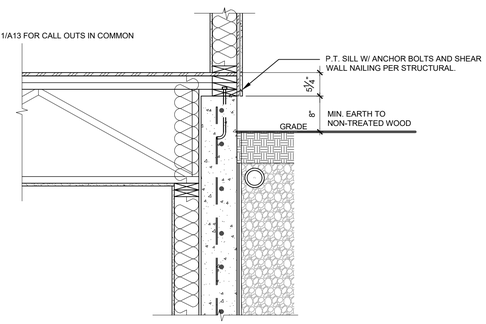

TOP CHORD BEARING FLOOR TRUSSES (3)

SCALE: 3/4" = 1'-0"

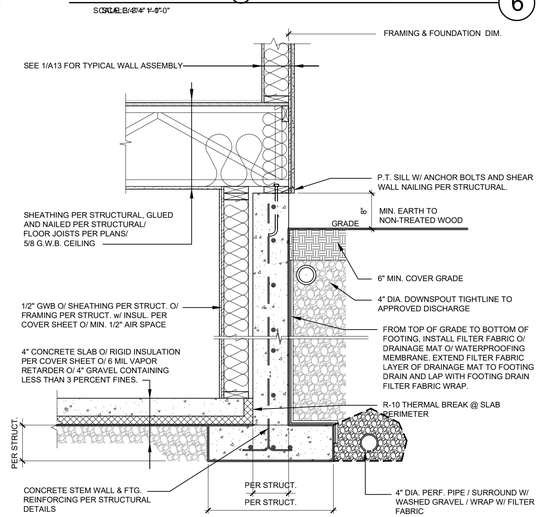

BASEMENT WALL (2)

SCALE: 3/4" = 1'-0"

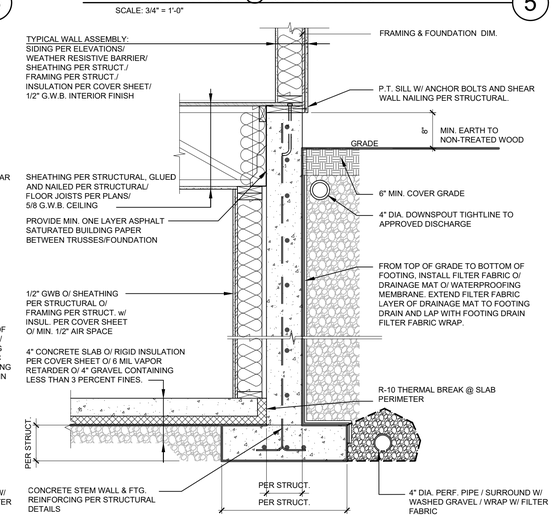

BASEMENT WALL (1)

SCALE: 3/4" = 1'-0"

MCCULLOUGH ARCHITECTS
5601 6th Ave S, Suite 371
Seattle, WA 98108
206.443.1181
mccullougharchitects.com

UNPUBLISHED WORK 2022 © McCullough Architects

Revisions	Comment
2022.05.03	permit response
2022.11.14	permit response

Date: 2021.05.10
Job No: 19-034
Project No: 00000
Drawn: MCG
Approved: APM

Owner: PREMIUM HOMES IN MERCER ISLAND LLC

REGISTERED ARCHITECT 7806 A. PHIL MCCULLOUGH STATE OF WASHINGTON

LOT 1

7216 93rd AVE. SE
MERCER ISLAND, WA 98040

Permit Submittal Set

Architectural Details

A13

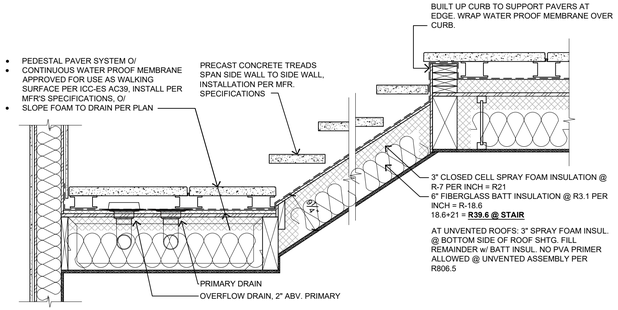

NOT USED (12)

SCALE: 3/4" = 1'-0"

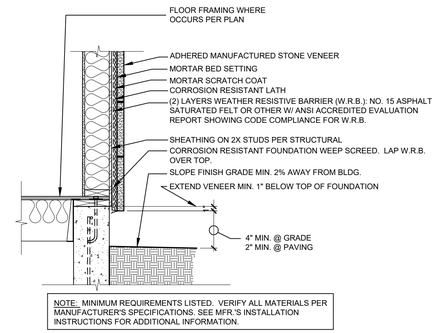

NOTE: MINIMUM REQUIREMENTS LISTED. VERIFY ALL MATERIALS PER MANUFACTURER'S SPECIFICATIONS. SEE MFR 'S INSTALLATION INSTRUCTIONS FOR ADDITIONAL INFORMATION.

STAIR @ ROOF DECK (11)

SCALE: 3/4" = 1'-0"

TYP. ADHERED STONE (10)

SCALE: 3/4" = 1'-0"

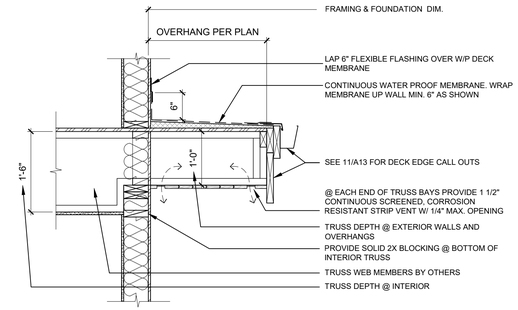

ROOF OVERHANG @ UPPER FLOOR (9)

SCALE: 3/4" = 1'-0"

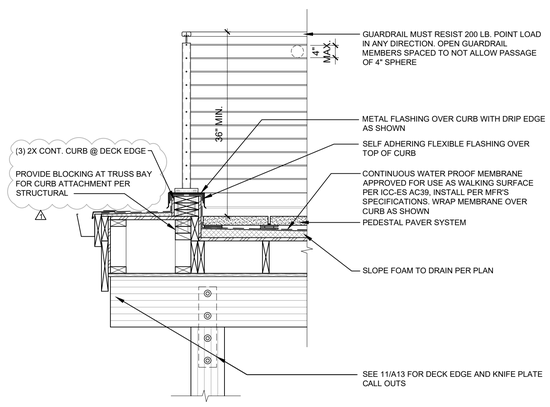

GUARDRAIL & DECK MEMBRANE (8)

SCALE: 3/4" = 1'-0"

NOT USED (7)

SCALE: 3/4" = 1'-0"

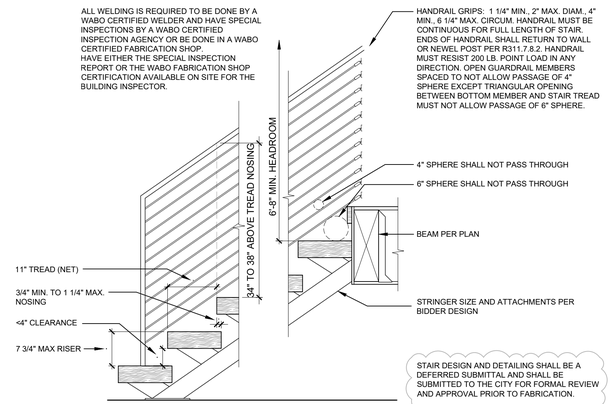

OPEN RISER STAIR (6)

SCALE: 3/4" = 1'-0"

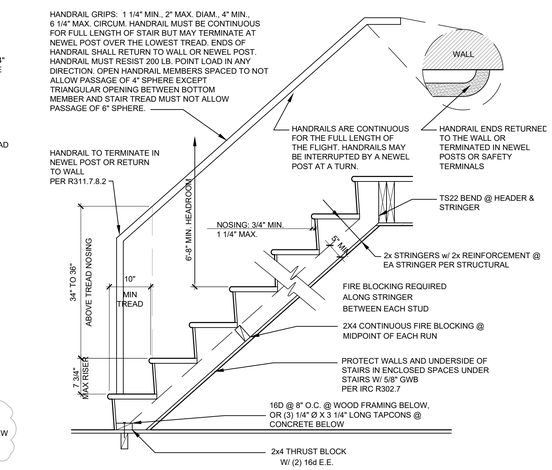

TYPICAL INTERIOR STAIR, CLOSED RISER (5)

SCALE: 3/4" = 1'-0"

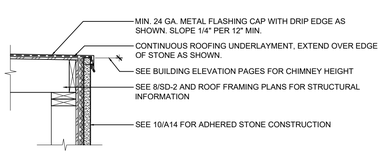

CHIMNEY CAP (4)

SCALE: 3/4" = 1'-0"

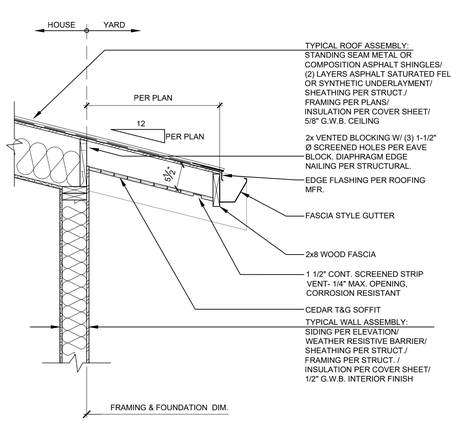

LOW EAVE @ STICK FRAMING (3)

SCALE: 3/4" = 1'-0"

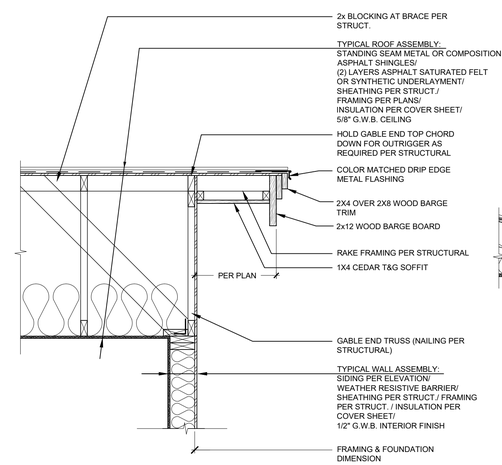

TYPICAL RAKE @ TRUSS FRAMING (2)

SCALE: 3/4" = 1'-0"

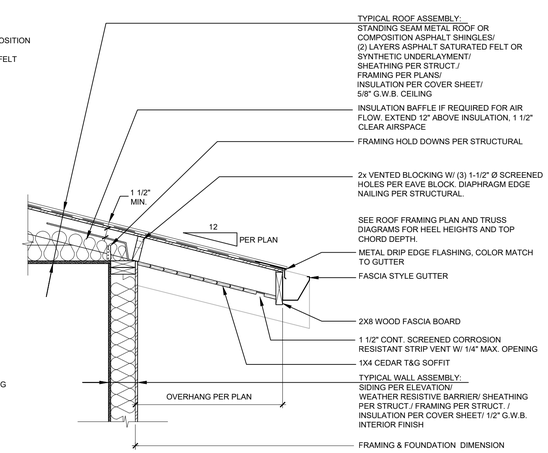

TYPICAL EAVE @ TRUSS FRAMING (1)

SCALE: 3/4" = 1'-0"

MCCULLOUGH ARCHITECTS
5601 6th Ave S, Suite 371
Seattle, WA 98108
206.443.1181
mccullougharchitects.com

UNPUBLISHED WORK 2022 © McCullough Architects

Revisions	Comment
2022.05.03	permit response 1
2022.11.14	permit response 2

Date: 2021.05.10
Job No: 19-034
Project No: 00000
Drawn: MCG
Approved: APM

Owner: PREMIUM HOMES IN MERCER ISLAND LLC

REGISTERED ARCHITECT PHILIP MCCULLOUGH STATE OF WASHINGTON 7806

LOT 1
7216 93rd AVE. SE
MERCER ISLAND, WA 98040

Permit Submittal Set

Architectural Details

A14

BASEMENT SLAB

4" CONC. SLAB ON 6 MIL VAPOR BARRIER ON 4" MIN. GRANULAR FILL ON 95% COMPACTED FILL/VIRGIN SOIL

GARAGE SLAB

4" CONC. SLAB ON 4" MIN. GRANULAR FILL ON 95% COMPACTED FILL/VIRGIN SOIL

PORCH SLAB

4" CONC. SLAB ON GRADE ON 6 MIL VAPOR BARRIER ON 4" MIN. GRANULAR FILL ON 95% COMPACTED FILL/VIRGIN SOIL

GENERAL STRUCTURAL NOTES

FOUNDATION

- DESIGN IS BASED ON 2018 INTERNATIONAL RESIDENTIAL CODE & 2018 INTERNATIONAL BUILDING CODE
- DESIGN LOADS:
  SOIL 2,000 PSF ALLOWABLE BEARING PRESSURE, PER RECOMMENDATIONS PER ROBERT M. PRIDE, LLC DATED 2/27/20
- CONCRETE SHALL ATTAIN THE FOLLOWING MINIMUM COMPRESSIVE STRENGTHS IN 28 DAYS, U.N.O.:
  f'c = 2,500 psi: .... FOUNDATION WALLS*
  2,500 psi: .... FOOTINGS*
  2,500 psi: .... INTERIOR SLABS ON GRADE
  3,500 psi: .... GARAGE & EXT. SLABS ON GRADE
  fy = 60,000 psi
  * UTILIZE 5½" SACK 2500 PSI CONCRETE MIXES THAT ARE EQUIVALENT TO 3,000 PSI CONCRETE FOR WEATHERING POTENTIAL
- ALL CONCRETE EXPOSED TO THE WEATHER SHALL NOT HAVE LESS THAN 5% OR MORE THAN 7% AIR ENTRAINMENT.
- FOUNDATION WALL DESIGN IS BASED ON BACKFILL SOIL RECOMMENDATIONS PER ROBERT M. PRIDE, LLC DATED 2/27/20
- TYPICAL REINFORCEMENT DETAILS: LAP ALL REBAR 24" MIN.; BEND BARS AND LAP AT CORNERS; PROVIDE 6" HOOK INTO SUPPORTING FOOTINGS WHEN FOOTINGS INTERSECT; PROVIDE 3" MINIMUM COVER AT THE BOTTOM BARS AND 1 1/2" COVER AT THE SIDES.
- FOUNDATION WALLS SHALL BE BRACED, PRIOR TO BACKFILLING, BY EITHER ADEQUATE TEMPORARY BRACING OR INSTALLATION OF FIRST FLOOR DECK.
- ALL FOOTINGS SHALL BEAR BELOW FROST LINE. CONSULT SOILS REPORT/ LOCAL MUNICIPALITY FOR MINIMUM DEPTH BELOW GRADE.
- FOOTINGS AND SLABS ON GRADE SHALL BEAR ON VIRGIN SOIL OR 95% COMPACTED FILL.
- PROVIDE CONTROL JOINTS AT ALL INSIDE CORNERS OF SLAB EDGES, AND OTHER LOCATIONS WHERE SLAB CRACKS ARE LIKELY TO DEVELOP. (15'-0" O.C.)
- FASTEN SILL PLATES TO FOUNDATION WALLS WITH ⅝" DIA. ANCHOR BOLTS w/ MIN. 3"x3"x¼" PLATE WASHERS (EDGE OF WASHER TO BE LOCATED WITHIN ½" OF EXTERIOR EDGE OF SILL PLATE) & NUTS @ 6'-0" O.C. @ 2-STORY & 4'-0" O.C. @ 3-STORY CONDITIONS w/ 7" MIN. EMBEDMENT INTO CONC. PROVIDE A MINIMUM OF 2 ANCHORS PER PLATE, 12" MAXIMUM FROM PLATE ENDS, U.N.O. (SEE FND. DETAILS).
- ALL LUMBER EXPOSED TO WEATHER OR IN CONTACT W/ CONCRETE OR MASONRY FOUNDATION SHALL BE PRESERVATIVE TREATED HEM FIR #2.
- BUILDER TO VERIFY CORROSION-RESISTANCE COMPATIBILITY OF HARDWARE & FASTENERS IN CONTACT w/ PRESERVATIVE-TREATED WOOD. CONTACT LUMBER & HARDWARE SUPPLIERS TO COORDINATE.

" 2015 IRC" - MAY 2015

HOLD-DOWN SCHEDULE

SYMBOL	SPECIFICATION
HD-1	SIMPSON STHD14 (RJ) HOLD-DOWN
HD-5	SIMPSON CS16 STRAP TIE (14" END LENGTH)
HD-6	SIMPSON MSTC40 STRAP TIE (CENTER STRAP ON FLOOR SYSTEM U.N.O.)
HD-7	SIMPSON MSTC66 STRAP TIE (CENTER STRAP ON FLOOR SYSTEM U.N.O.)
HD-8	SIMPSON HDU8-SDS2.5 HOLD-DOWN
HD-10	SIMPSON MSTC76 STRAP TIE (CENTER STRAP ON FLOOR SYSTEM U.N.O.)
HD-14	SIMPSON HDU14-SDS2.5 HOLD-DOWN

MEANS & METHODS NOTES

THE STRUCTURE IS DESIGNED TO BE SELF SUPPORTING AND STABLE AFTER THE BUILDING IS FINISHED AND ALL PLAN, DETAIL, AND NOTE SPECIFICATIONS HAVE BEEN COMPLETED. IT IS THE CONTRACTOR'S SOLE RESPONSIBILITY TO DETERMINE THE ERECTION PROCEDURES AND SEQUENCE TO INSURE THE SAFETY OF THE BUILDING AND ITS COMPONENTS DURING CONSTRUCTION. THIS INCLUDES, BUT IS NOT LIMITED TO, THE ADDITION OF NECESSARY SHORING, SHEETING, TEMPORARY BRACING, GUYS, AND TIE-DOWNS. CONTRACTOR SHALL BE RESPONSIBLE FOR ALL SHORING AND BRACING REQUIRED TO STABILIZE AND PROTECT EXISTING AND ADJACENT STRUCTURES AND SYSTEMS DURING COURSE OF DEMOLITION AND CONSTRUCTION OF THE PROJECT.

STRUCTURAL DESIGN AND SPECIFICATIONS ASSUME THAT ALL SUPPORTING AND NON-SUPPORTING ELEMENTS IN CONTACT WITH FLOOR FRAMING ARE LEVEL, INCLUDING, BUT NOT LIMITED TO; FOUNDATIONS, SLABS ON GRADE, BEAMS, WALLS, AND NON-BEARING ELEMENTS. IT IS THE CONTRACTOR'S RESPONSIBILITY TO VERIFY LEVELNESS AND MAKE ADJUSTMENTS AS NECESSARY, INCLUDING CONSIDERATION OF THOSE AREAS THAT MAY BE WITHIN CONTRACTUAL, INDUSTRY, OR WARRANTY TOLERANCES.

ADDITIONAL NOTES FOR TRUSS & I-JOIST MANUFACTURER

ROOF TRUSS, FLOOR TRUSS AND ENGINEERED JOISTS SHALL BE DESIGNED TO MEET THE DIFFERENTIAL DEFLECTION CRITERIA BELOW, UNLESS NOTED OTHERWISE ON PLAN. MULHERN & KULP CANNOT BE HELD RESPONSIBLE FOR ANY STRUCTURAL ISSUES RELATED TO ANY BUILDING COMPONENT IF COMPONENT SHOP DRAWINGS ARE NOT SUBMITTED TO M&K FOR REVIEW PRIOR TO FABRICATION, DELIVERY, OR INSTALLATION.

TRUSSES SHALL BE DESIGNED SO THAT DIFFERENTIAL DEFLECTION BETWEEN ADJACENT PARALLEL TRUSSES OR GIRDER TRUSSES DOES NOT EXCEED THE FOLLOWING:

A. ROOF TRUSSES:
   1/4" DEAD LOAD
B. FLOOR TRUSSES, ATTIC TRUSSES, & I-JOISTS:
   1/8" DEAD LOAD
C. FLOOR TRUSSES & ATTIC TRUSSES ADJACENT TO FLOOR FRAMING BY OTHERS:
   LIMIT ABSOLUTE TRUSS DEFLECTION TO
   3/16" DEAD LOAD. (NOT DIFFERENTIAL DEFLECTION)

LOADING AND DESIGN PARAMETERS

GRAVITY DESIGN LOADS:

DEAD LOAD (PSF):

ROOF TRUSS TOP CHORDS :	10
ROOF TRUSS BOT CHORDS :	7
ROOF RAFTERS (2X) :	10
ROOF (I-JOISTS) :	10
FLOOR (2X) :	10
FLOOR (TRUSSES) :	15
TILE FLOORS :	10
PEDESTAL PAVERS:	10

LIVE LOAD (PSF):

ROOF :	20
RESIDENTIAL LIVING AREAS :	40
RESIDENTIAL SLEEPING AREAS :	30
RESIDENTIAL WOOD DECKS :	60
GARAGE :	50

SNOW LOAD:

GROUND SNOW LOAD (P_g) (PSF) :	25
FLAT ROOF SNOW LOAD (P_f) (PSF) :	30
SNOW EXPOSURE FACTOR (C_e) :	0.9
SNOW LOAD IMPORTANCE FACTOR (I) :	1.0
THERMAL FACTOR (C_t) :	1.2

LATERAL DESIGN LOADS:

WIND LOAD: (IBC 1609)

SPEED (V_{ult}) (MPH) :	110
WIND RISK CATEGORY :	II
IMPORTANCE FACTOR (I_w) :	1.0
EXPOSURE CATEGORY :	C
INTERNAL PRESSURE COEFF. (GC_{pi}) :	±0.18
TOPOGRAPHIC FACTOR (K_{zt}) :	1.0

SEISMIC LOAD: (IBC 1613)

SEISMIC RISK CATEGORY :	II
SEISMIC IMPORTANCE FACTOR (I_e) :	1.0
MAPPED SPECTRAL RESPONSE : S_S: 1.453 S_1: 0.502	
SITE CLASS :	D
SPECTRAL RESPONSE COEFF. : S_{DS}: 0.969 S_{D1}: 0.602	
SEISMIC DESIGN CATEGORY:	D

BASIC SEISMIC-FORCE-RESISTING SYS :
LIGHT FRAMED WALLS
W/WOOD STRUCTURAL PANELS

ULTIMATE BASE SHEAR (HOME):
TRANS: 24 K LONG: 24 K

SEISMIC RESPONSE COEFF. (C_s) :
TRANS: 0.149 LONG: 0.149

RESPONSE MODIFICATION FACTOR (R) :
TRANS: 6.5 LONG: 6.5

ANALYSIS PROCEDURE USED:
EQUIVALENT LATERAL FORCE

LATERAL BRACING NOTES

THIS HOME HAS BEEN ENGINEERED TO RESIST LATERAL FORCES RESULTING FROM:
100 MPH WIND SPEED, EXP. C
(ASCE 7-16 WIND MAP, PER IRC R301.2.1.1)
RISK CAT. 2 & SEISMIC CAT. D2.

110 MPH WIND IN 2018 IRC MAP

ENGINEERED DESIGN WAS COMPLETED PER 2018 IBC (SECTION 1609 & 1613) & ASCE 7-16, AS PERMITTED BY R301.1.3 OF THE 2018 IRC. ACCORDINGLY, THIS HOME, AS DOCUMENTED AND DETAILED HEREWITHIN, IS ADEQUATE TO RESIST THE CODE REQUIRED LATERAL FORCES, AND DOES NOT NEED TO CONFORM TO THE PRESCRIPTIVE PROVISIONS OF R602.10.

STANDARD EXTERIOR WALL SHEATHING SPECIFICATIONS

(INTERIOR WALL SPECIFICATION WHERE NOTED ON PLANS)

- 7/16" OSB OR 15/32" PLYWOOD:

  FASTEN SHEATHING w/ 2½"x0.131" NAILS @ 6"o.c. AT ALL SUPPORTED PANEL EDGES AND 12" O.C. IN THE PANEL FIELD. ALL SHEATHING SHEET PANEL EDGES SHALL OCCUR OVER WALL FRAMING MEMBERS OR 2x HORIZONTAL BLOCKING SHALL BE PROVIDED TO SUPPORT PANEL EDGE. ALL EXTERIOR WALLS SHALL BE CONSTRUCTED PER THIS SPECIFICATION U.N.O. ON PLANS.

3" o.c. EDGE NAILING

(WHERE NOTED ON PLANS)

- 7/16" OSB OR 15/32" PLYWOOD:

  ONLY AT LOCATIONS INDICATED ON PLANS - SHEATHE WALL SHOWN WITH 7/16" OSB. FASTEN SHEATHING w/ 2½"x0.131" NAILS @ 3" O.C. AT EDGES AND 12" O.C. AT CENTER. ALL SHEATHING SHEET PANEL EDGES SHALL OCCUR OVER WALL FRAMING MEMBERS OR 2x HORIZONTAL BLOCKING SHALL BE PROVIDED TO SUPPORT PANEL EDGE AND 3" O.C. FASTENING.

NOTES:

1. LATERAL ANALYSIS ASSUMES STUD SPACING @ 16" o.c.
2. ALL SHEAR WALLS SHALL HAVE DOUBLE TOP PLATES FASTENED TOGETHER w/ 3"x0.131" NAILS @ 8" O.C. USE (12)3½"x0.135" NAILS AT EACH LAP SPLICE, (6) EACH SIDE OF JOINT (TYP. U.N.O)
3. ALL EXTERIOR WALLS ARE CONTINUOUSLY SHEATHED.
4. ALL INTERIOR SHEAR WALLS AND EXTERIOR WALLS ARE SHEATHED ABOVE AND BELOW OPENINGS.

LEGEND

- INTERIOR BEARING WALL
- BEARING WALL ABOVE (B.W.A.), OR SHEARWALL ABOVE (S.W.A.)
- BEAM / HEADER
- INTERIOR SHEAR WALL PANEL OR EXTERIOR SHEAR WALL w/ 3" o.c. EDGE NAILING
- HATCH INDICATES AREA OF OVERFRAMING
- METAL HANGER
- INDICATES POST ABOVE. PROVIDE SOLID BLOCKING UNDER POST OR JAMB ABOVE. (P.A. = POST ABOVE)
- INDICATES HOLDOWN.

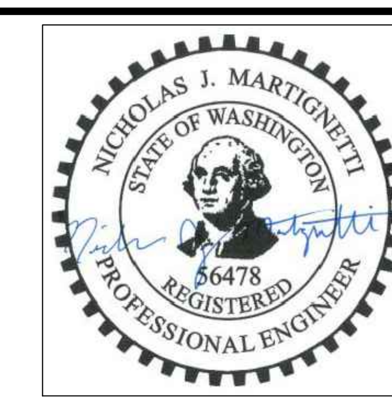

GENERAL STRUCTURAL NOTES

DESIGN PARAMETERS

- DESIGN IS BASED ON 2018 INTERNATIONAL RESIDENTIAL CODE & 2018 INTERNATIONAL BUILDING CODE
- WOOD FRAME ENGINEERING IS BASED ON NDS, "NATIONAL DESIGN SPECIFICATION FOR WOOD CONSTRUCTION" - LATEST EDITION.

GENERAL FRAMING

- EXTERIOR BEARING WALLS SHALL BE 2x4 OR 2x6 (AS SHOWN ON PLANS) @ 16" O.C. (W/ DOUBLE TOP PLATE) HEM FIR (HF) "STUD" GRADE LUMBER, OR BETTER, U.N.O.
- INTERIOR BEARING WALLS SHALL BE 2x4 OR 2x6 (AS SHOWN ON PLANS) @ 16" O.C. (W/ DOUBLE TOP PLATE) HEM FIR (HF) "STUD" GRADE LUMBER, OR BETTER, U.N.O.
- ALL NON-BEARING INTERIOR STUD WALLS SHALL BE CONSTRUCTED WITH 2x 'STUD' GRADE MEMBERS SPACED @ 24" O.C. (MAX.)
- ALL WALLS TALLER THEN TYP. PLATE HEIGHT SHALL BE CONSIDERED BALLOON FRAMED & SHALL BE CONSTRUCTED FROM FLOOR TO UNDERSIDE OF FRAMING AT NEXT LEVEL. B.F. WALLS SHALL BE 2x4 OR 2x6 (AS SHOWN ON PLANS) HEM FIR (HF) #2 GRADE LUMBER, OR BETTER.
- ALL HEADERS SHALL BE SUPPORTED BY (1)2x JACK STUD & (1)2x KING STUD, MINIMUM.
  - THE NUMBER OF STUDS SPECIFIED AT A SUPPORT INDICATES THE NUMBER OF JACK STUDS REQUIRED, U.N.O..
- BUILT-UP POSTS SHALL BE 2x4 OR 2x6 HEM FIR (HF) "STUD" GRADE LUMBER, OR BETTER, U.N.O. & SOLID WOOD COLUMNS SHALL BE SPRUCE PINE FIR (SPF) #2 GRADE LUMBER, OR BETTER, U.N.O.
- ALL 2x6 AND LARGER SOLID SAWN BEAMS/HEADERS SHALL BE HEM FIR #2 (HF #2) OR BETTER. ALL 4x6 AND LARGER SOLID SAWN LUMBER SHALL BE DOUG FIR #2 (DF #2) OR BETTER.
- ALL FRAMING LUMBER SHALL BE KILN DRIED TO 15% MC (KD-15).
- ALL TYP. NAIL FASTENER REQUIREMENTS ARE NOTED IN GENERAL NOTES, IN DETAILS, OR ON PLANS. ALL NAILS SPECIFIED ARE MIN DIAMETER AND LENGTH REQUIRED FOR CONNECTION. ALL HANGER NAILS SHALL BE INSTALLED PER MANUFACTURER'S REQUIREMENTS FOR MAX CHARTED CAPACITY. NOTE: HANGERS USE COMMON NAIL DIAMETERS NOT TYPICAL FRAMING GUN NAILS.
- FASTEN ALL BEAMS TO COLUMNS, OR FLUSH BEAMS TO SUPPORTING BEAMS, w/ (4) 3"x0.131" TOENAILS (MIN.), TYP. U.N.O.
- PROVIDE SOLID BLOCKING IN FLOOR SYSTEM UNDER ALL POSTS & HOLD-DOWNS CONTINUOUS TO FOUNDATION/BEARING. BLOCKING TO MATCH POST ABOVE.
- ENGINEERED LUMBER TO MEET OR EXCEED THE FOLLOWING:
  - LSL MEMBERS - Fb=2325 PSI; Fv=310 PSI; E=1.55x10^6 PSI
  - LVL MEMBERS - Fb=2600 PSI; Fv=285 PSI; E=2.0x10^6 PSI
  - GLB MEMBERS - Fb(+)=2400 PSI; Fb(-)=1850 PSI; Fv=265 PSI; E=1.8x10^6 PSI; DF/DF; 24F-V4 (U.N.O)
- ENGINEERED LUMBER POSTS TO MEET OR EXCEED THE FOLLOWING:
  - LVL MEMBERS - Fb=2400 PSI; Fc||=2500 PSI; E=1.8x10^6 PSI
- FACE NAIL MULTI-PLY 2x BEAMS & HEADERS W/ 3-ROWS OF 3"x0.131" NAILS (MIN.) @ 12" O.C. STAGGERED. APPLY NAILING FROM BOTH FACES @ 3-PLY OR MORE CONDITIONS. UTILIZE 2 ROWS OF NAILS FOR 2x6 & 2x8 MEMBERS.
- ALL MEMBERS SPECIFIED AS MULTI-PLY 1¾" SHALL BE FASTENED TOGETHER PER MANUFACTURER. EQUIVALENT WIDTH SOLID MATERIAL MAY BE USED AS EQUAL.
- FASTEN 2x WOOD PLATES TO TOP FLANGE OF STEEL BEAMS w/P.A.F.s ('HILTI' X-U PINS OR EQUAL (0.157" DIA. x 2" LONG MIN.)) @ 16" O.C. STAGGERED, OR 1/2" DIA. BOLTS @ 48" O.C., STAGGERED.
- REFER TO IRC FASTENING SCHEDULE TABLE R602.3(1) FOR ALL CONNECTIONS, TYP. U.N.O.

FLOOR FRAMING

- I-JOISTS/TRUSSES SHALL BE DESIGNED BY MANUF. TO MEET OR EXCEED L/480 LIVE LOAD DEFLECTION CRITERIA AND SHALL RUN CONTINUOUS OVER SUPPORTS WHEREVER POSSIBLE. ALL LOADS SHOWN ON PLAN FOR MANUF. DESIGNS ARE ASD LEVEL LOADS, U.N.O. (EXCLUDES STONE/MARBLE OR WET BED CONSTRUCTED FLOORS - CONTACT M&K FOR EXCLUDED DESIGNS).
- ALL METAL I-JOIST/TRUSS HANGERS SHALL BE SPECIFIED BY I-JOIST/TRUSS MANUFACTURER, UNLESS OTHERWISE NOTED.
- I-JOIST/TRUSS SHOP DRAWINGS SHALL BE SUBMITTED TO ARCHITECT AND ENGINEER FOR REVIEW AND APPROVAL PRIOR TO FABRICATION OR DELIVERY.
- 2x FLOOR JOISTS HAVE BEEN DESIGNED TO MEET OR EXCEED L/360 LIVE LOAD DEFLECTION CRITERIA.
- TYPICAL 2x JOIST HANGERS (U.N.O. ON PLANS):
  SINGLE PLY: SIMPSON LUS210
  DOUBLES: SIMPSON LUS210-2
- FLOOR SHEATHING SHALL BE 23/32" A.P.A. RATED 'STURD-I-FLOOR' 24" O.C, EXPOSURE 1 (OR APPROVED EQUAL) WITH TONGUE AND GROOVE EDGES. FASTEN TO FRAMING MEMBERS W/ GLUE AND 2 ½" x 0.131" NAILS @ 6"o.c. @ PANEL EDGES & @ 12"o.c. FIELD.
- ALL FLUSH CONNECTIONS SHALL BE CONNECTED WITH HANGER APPROPRIATE FOR MEMBER SIZE. U.N.O.
- FASTEN HANGERS TO SINGLE PLY FLUSH BEAMS w/ 1½" LONG NAILS.

ROOF FRAMING

- FASTEN EACH ROOF TRUSS TO TOP PLATE W/ (3) 3"x0.131" TOENAILS (MIN.) & (1) 'SIMPSON' H2.5T CLIP @ ALL BEARING POINTS. PROVIDE (2) 'SIMPSON' H2.5T CLIPS AT 2-PLY GIRDER TRUSSES, (3) 'SIMPSON' H2.5T CLIPS AT 3-PLY GIRDER TRUSSES AT ALL BEARING POINTS.
- FASTEN EACH ROOF RAFTER TO TOP PLATE WITH (1) 'SIMPSON' H2.5T CLIP. PROVIDE (2) 'SIMPSON' H2.5T CLIPS AT FLUSH BEAMS IN THE ROOF - AT ALL BEARING POINTS.
- ROOF SHEATHING SHALL BE 7/16" A.P.A. RATED SHEATHING 24/16 EXPOSURE 1 (OR APPROVED EQUAL). FASTEN TO FRAMING MEMBERS w/ 2 ½" x 0.131" NAILS @ 6"o.c. AT PANEL EDGES & @ 12" O.C. AT INTERMEDIATE SUPPORTS. ROOF SHEATHING SHALL EXTEND BELOW ALL INSTANCES OF OVERFRAMING. BLOCKING SHALL BE INSTALLED AS REQUIRED TO LIMIT ROOF SHEATHING SPANS TO 24" MAX.
- WITHIN 48" OF ALL ROOF EDGES, RIDGES, & HIPS FASTEN ROOF SHEATHING FIELDS PER EDGE NAILING SPEC.
- ALL METAL HANGERS SHALL BE SPECIFIED BY THE TRUSS MANUFACTURER, UNLESS OTHERWISE NOTED.
- ROOF TRUSS SHOP DRAWINGS SHALL BE SUBMITTED TO ARCHITECT AND ENGINEER FOR REVIEW AND APPROVAL PRIOR TO FABRICATION OR DELIVERY.
- ROOF TRUSS SHOP DRAWINGS & CALCULATIONS SHALL BE PREPARED BY A WASHINGTON STATE LICENSED ENGINEER AND SHALL BE DESIGNED FOR UNBALANCED SNOW LOADING PER ASCE 7-16, SECTION 7.6.
- ERECT AND INSTALL ROOF TRUSSES PER WTCA & TPI'S BCSI 1-08 "GUIDE TO GOOD PRACTICE FOR HANDLING, INSTALLING & BRACING OF METAL PLATE CONNECTED WOOD TRUSSES."
- FASTEN OVER-FRAMED TRUSS SETS TO TRUSSES BELOW w/ (2) 3"x0.131" TOENAILS AT EA. TRUSS.
- SUPPORT PORCH & SHORT SPAN ROOF TRUSSES (UP TO 6' TRIB.) w/2x6 LEDGER FASTENED TO FRAMING w/(3) 3"x0.131" NAILS @ 16" o.c.
- FASTEN ALL INTERIOR NON-BEARING PARTITION WALLS TO TRUSS BOTTOM CHORD ABOVE WITH SIMPSON STC CLIPS AT 24" o.c. MAX. PROVIDE BLOCKING BETWEEN THE TRUSS BOTTOM CHORDS AS REQUIRED FOR THE PARALLEL CONDITIONS.

" 2018 IRC" - OCT 2020

seal:

© copyright : MULHERN & KULP Structural Engineering, Inc.

MULHERN+KULP
RESIDENTIAL STRUCTURAL ENGINEERING
7220 Trade Street, Suite 350, San Diego, CA 92121
p 619-650-0010 ▸ mulhernkulp.com

M&K project number: 244-20019

project mgr: NJM
drawn by: NJD
issue date: 12-22-20

REVISIONS:

date:	initial:
09/28/22 FOUNDATION WALL REVISIONS	BFD
10/17/22 PLAN REVIEW COMMETNS	RJD

McCULLOUGH ARCHITECTS

STRUCTURAL NOTES

BARCELO HOMES
7216 93RD AVE. SE
MERCER ISLAND, WASHINGTON

sheet: S-0

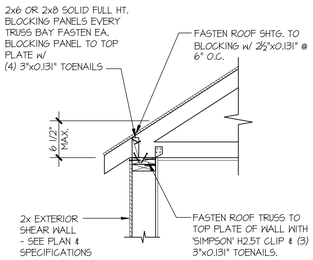

TYPICAL SHEAR TRANSFER DETAIL @ ROOF

1 SCALE: 3/4"=1'-0" HEEL HEIGHT LESS THAN 6 ½"

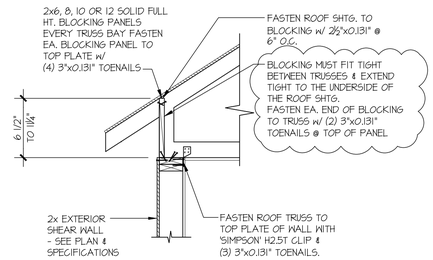

TYPICAL SHEAR TRANSFER DETAIL @ ROOF

1 SCALE: 3/4"=1'-0" HEEL HEIGHT BETWEEN 6 ½" - 14"

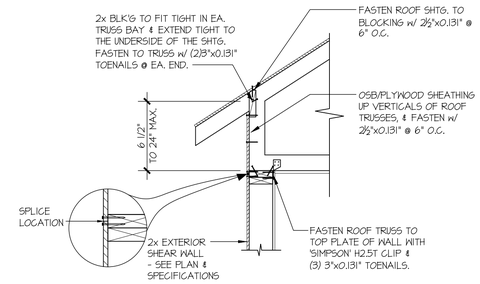

TYPICAL SHEAR TRANSFER DETAIL @ RAISED HEEL TRUSS

1 SCALE: 3/4"=1'-0" HEEL HEIGHT UP TO 24" MAX.

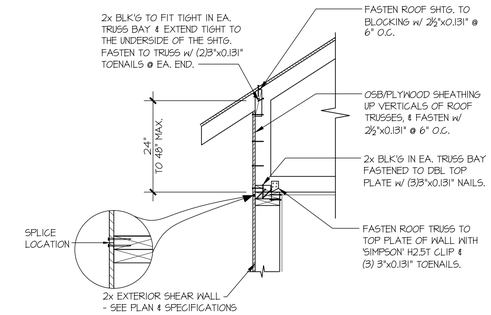

TYPICAL SHEAR TRANSFER DETAIL @ RAISED HEEL TRUSS

1 SCALE: 3/4"=1'-0" HEEL HEIGHT UP TO 42" MAX.

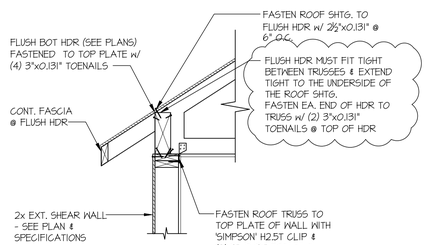

TYPICAL SHEAR TRANSFER DETAIL @ ROOF

1A SCALE: 3/4"=1'-0" @ FLUSH HDR

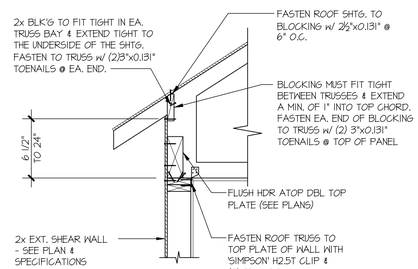

TYPICAL SHEAR TRANSFER DETAIL @ ROOF

1A SCALE: 3/4"=1'-0" @ FLUSH HDR

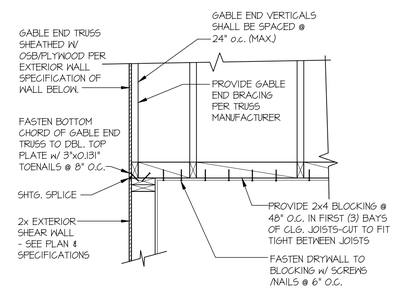

TYPICAL GABLE END DETAIL

2 SCALE: 3/4"=1'-0"

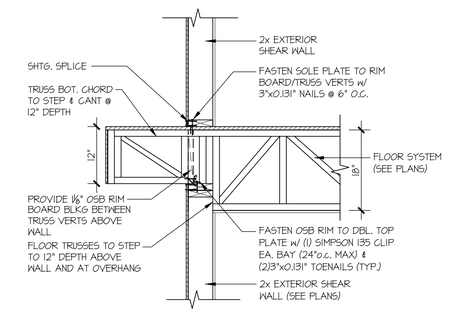

TYPICAL SHEAR TRANSFER DETAIL BETWEEN FLOORS @ EXTERIOR WALL

3 SCALE: 3/4"=1'-0" PERPENDICULAR FRAMING

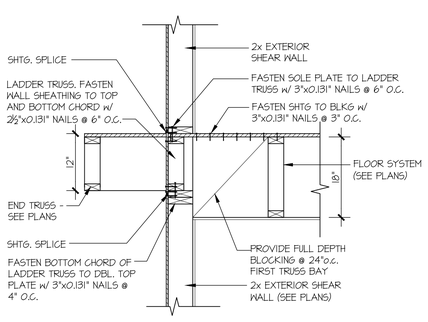

TYPICAL SHEAR TRANSFER DETAIL BETWEEN FLOORS @ EXTERIOR WALL

4 SCALE: 3/4"=1'-0" PARALLEL FRAMING

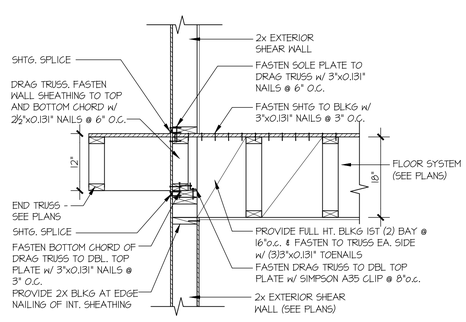

TYPICAL SHEAR TRANSFER DETAIL BETWEEN FLOORS @ EXTERIOR WALL

4A SCALE: 3/4"=1'-0" PARALLEL FRAMING

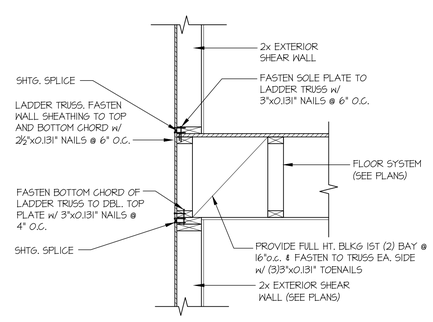

TYPICAL SHEAR TRANSFER DETAIL BETWEEN FLOORS @ EXTERIOR WALL

4B SCALE: 3/4"=1'-0" PARALLEL FRAMING

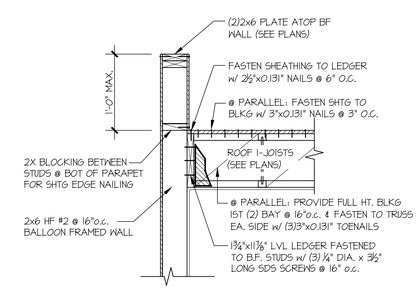

SECTION

5 SCALE: 3/4"=1'-0"

seal:

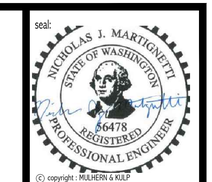

© copyright : MULHERN & KULP Structural Engineering, Inc.

MULHERN+KULP
RESIDENTIAL STRUCTURAL ENGINEERING
7220 Trade Street, Suite 350, San Diego, CA 92121
p 619-650-0010 • mulhernkulp.com

M&K project number: 244-20019

project mgr: NJM
drawn by: NJD
issue date: 12-22-20

REVISIONS:

date:	initial:
04/28/22 FOUNDATION WALL REVISIONS	BFD
10/17/22 PLAN REVIEW COMMENTS	RJD

McCullough Architects

Structural Details

Barcelo Homes
7216 93rd Ave. SE
Mercer Island, Washington

sheet:

SD-1

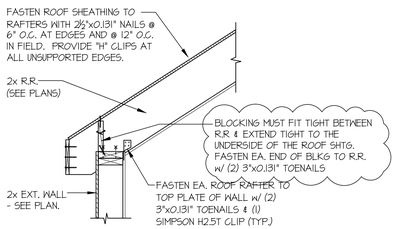

6 SECTION
SCALE: 3/4"=1'-0"

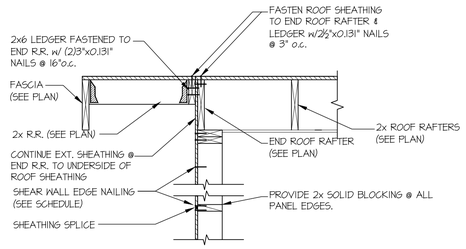

7 TYPICAL GABLE END DETAIL
SCALE: 3/4"=1'-0"

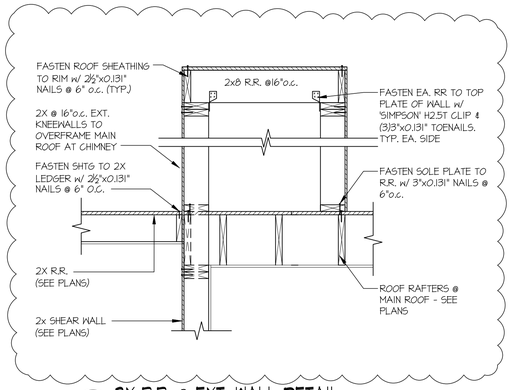

8 2X R.R. @ EXT. WALL DETAIL
SCALE: 3/4"=1'-0"

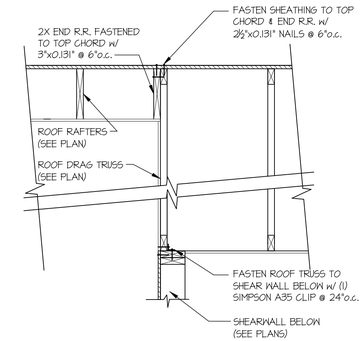

9 INT. SHEARWALL @ R.T. AND R.R. DETAL
SCALE: 3/4"=1'-0"

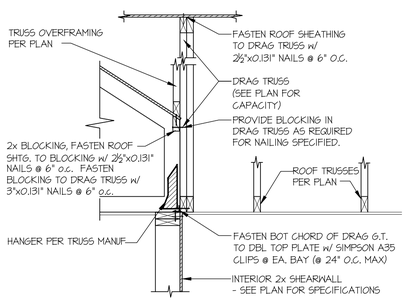

10 INT. SHEARWALL @ TURNED ROOF DETAL
SCALE: 3/4"=1'-0"

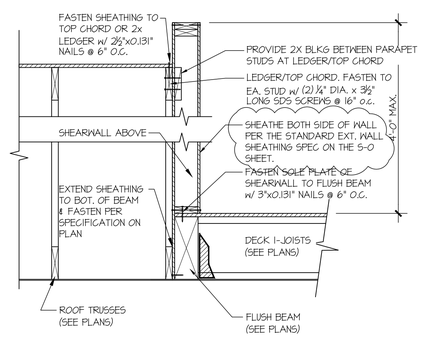

11 SECTION
SCALE: 3/4"=1'-0"

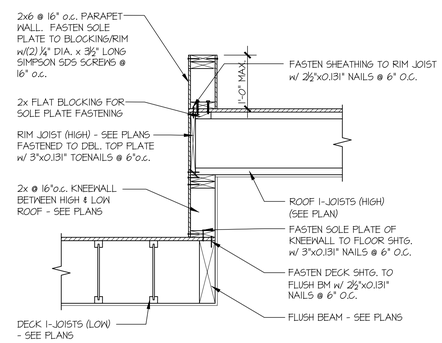

12 SECTION
SCALE: 3/4"=1'-0"

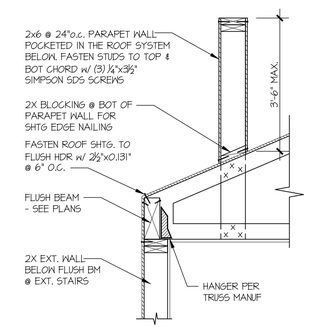

13 SECTION
SCALE: 3/4"=1'-0"

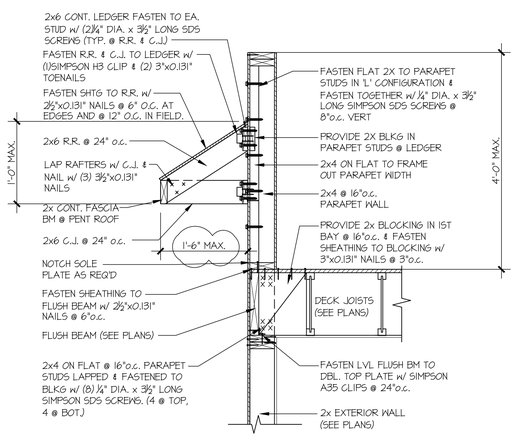

14 SECTION
SCALE: 3/4"=1'-0"

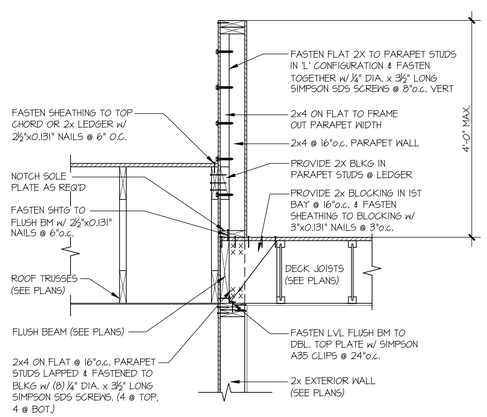

15 SECTION
SCALE: 3/4"=1'-0"

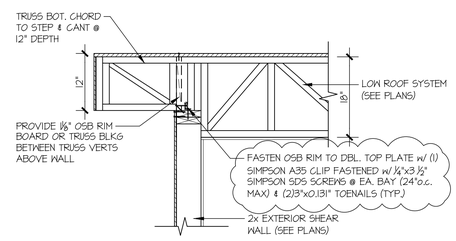

16 SECTION
SCALE: 3/4"=1'-0"

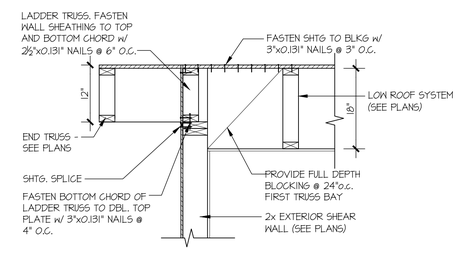

17 SECTION
SCALE: 3/4"=1'-0"

seal:

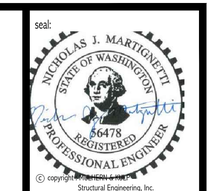

© copyright MULHERN + KULP Structural Engineering, Inc.

MULHERN+KULP
RESIDENTIAL STRUCTURAL ENGINEERING
7220 Trade Street, Suite 350, San Diego, CA 92121
p 619-650-0010 • mulhernkulp.com

M&K project number: 244-20019

project mgr:	NJM
drawn by:	NJD
issue date:	12-22-20

REVISIONS:

date:	initial:
04/28/22 FOUNDATION WALL REVISIONS	BFD
10/17/22 PLAN REVIEW COMMENTS	RJD

McCULLOUGH ARCHITECTS

STRUCTURAL DETAILS

BARCELO HOMES
7216 93RD AVE. SE
MERCER ISLAND, WASHINGTON

sheet:

SD-2

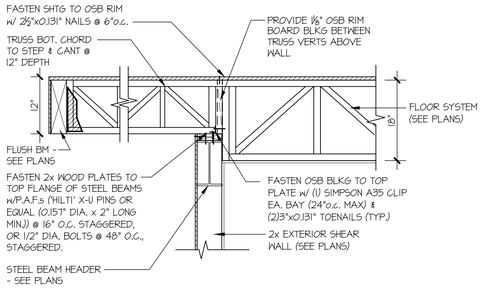

18 SECTION
SCALE: 3/4"=1'-0"

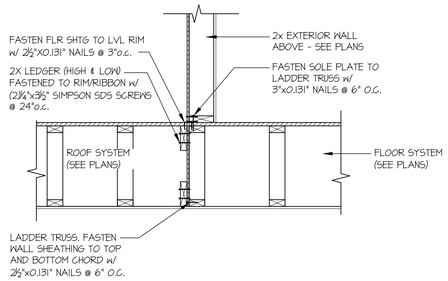

19 SECTION
SCALE: 3/4"=1'-0"

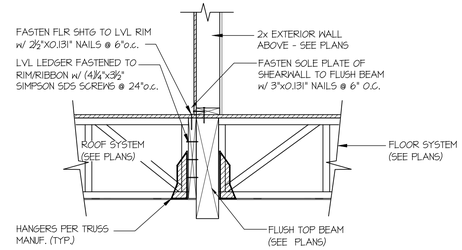

20 SECTION
SCALE: 3/4"=1'-0"

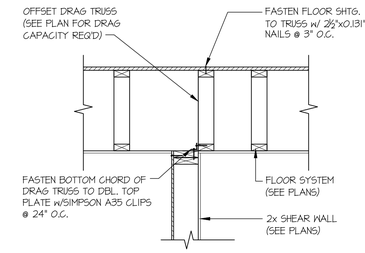

21 SHEAR TRANSFER DETAIL @ SHEAR WALL BELOW
SCALE: 3/4"=1'-0"

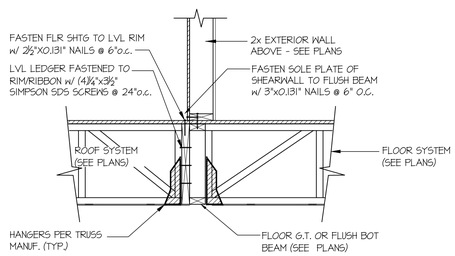

22 SECTION
SCALE: 3/4"=1'-0"

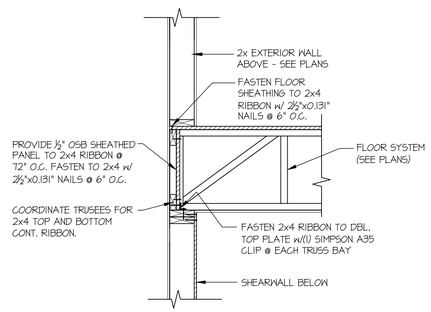

23 SHEAR TRANSFER DETAIL @ INTERIOR SHEAR WALL
SCALE: 3/4"=1'-0"

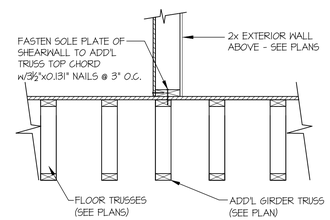

24 SECTION
SCALE: 3/4"=1'-0"

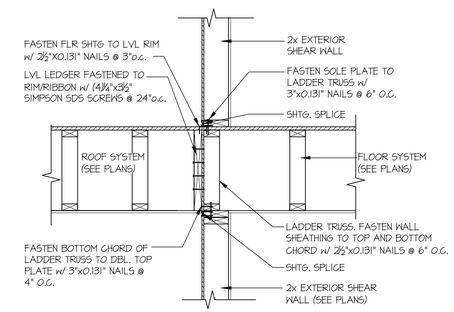

25 SECTION
SCALE: 3/4"=1'-0"

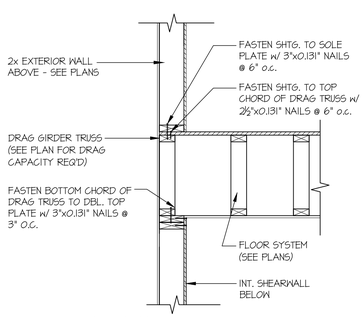

26 SECTION
SCALE: 3/4"=1'-0"

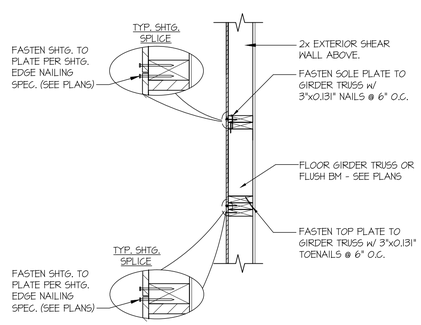

27 SECTION
SCALE: 3/4"=1'-0"

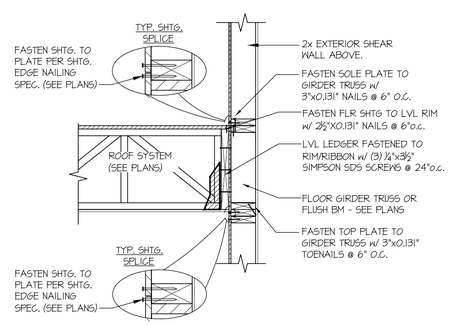

28 SECTION
SCALE: 3/4"=1'-0"

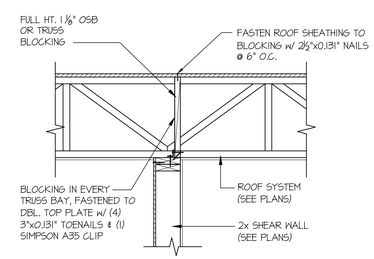

29 SECTION
SCALE: 3/4"=1'-0"

seal:

NICHOLAS J. MARTIGNETTI
STATE OF WASHINGTON
36478
REGISTERED
PROFESSIONAL ENGINEER

© copyright MULHERN + KULP Structural Engineering, Inc.

MULHERN+KULP
RESIDENTIAL STRUCTURAL ENGINEERING
7220 Trade Street, Suite 350, San Diego, CA 92121
p 619-650-0010 • mulhernkulp.com

M&K project number: 244-20019

project mgr:	NJM
drawn by:	NJD
issue date:	12-22-20

REVISIONS:

date:	initial:
04/28/22 FOUNDATION WALL REVISIONS	BFD
10/17/22 PLAN REVIEW COMMENTS	RJD

McCULLOUGH ARCHITECTS

STRUCTURAL DETAILS

BARCELO HOMES
7216 93RD AVE. SE
MERCER ISLAND, WASHINGTON

sheet:

SD-3

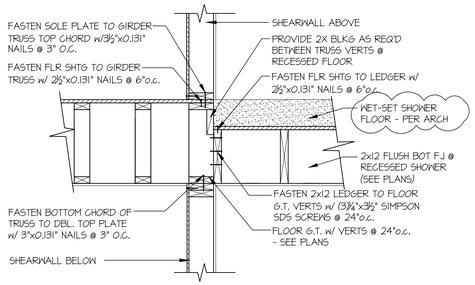

30 SECTION
SCALE: 3/4"=1'-0"

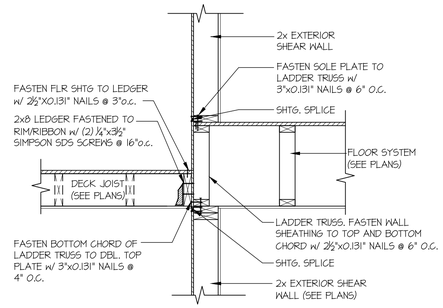

31 SECTION
SCALE: 3/4"=1'-0"

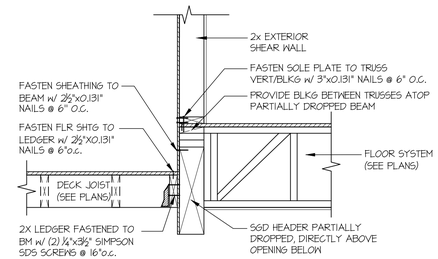

32 SECTION
SCALE: 3/4"=1'-0"

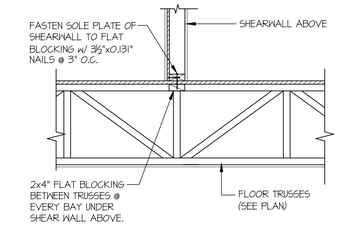

33 SECTION
SCALE: 3/4"=1'-0"

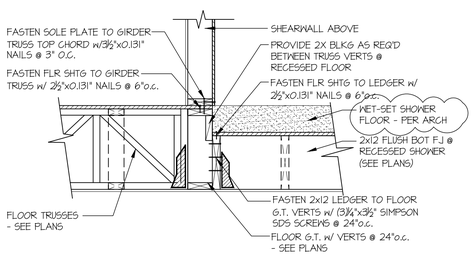

34 SECTION
SCALE: 3/4"=1'-0"

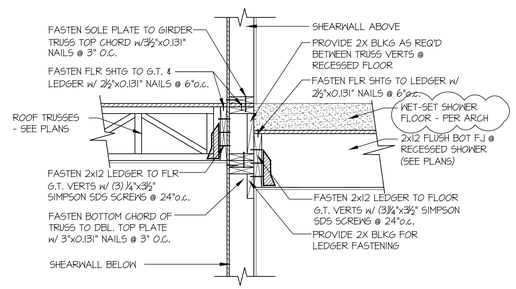

35 SECTION
SCALE: 3/4"=1'-0"

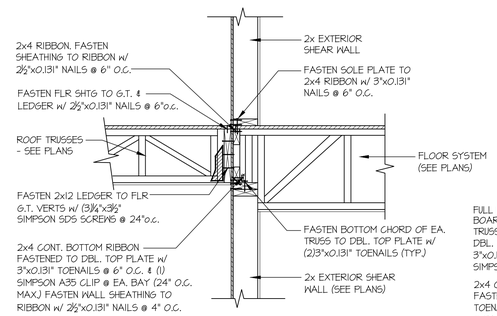

36 SECTION
SCALE: 3/4"=1'-0"

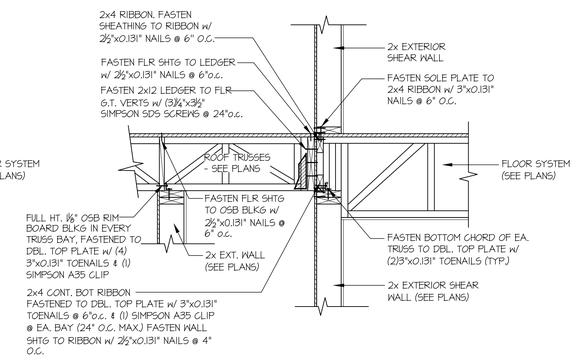

37 SECTION
SCALE: 3/4"=1'-0"

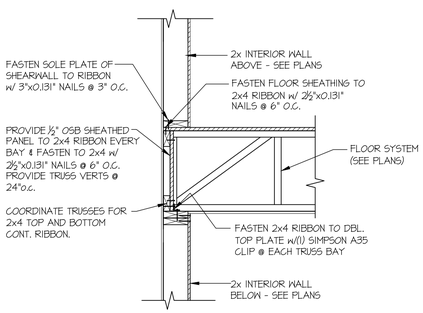

38 SECTION
SCALE: 3/4"=1'-0"

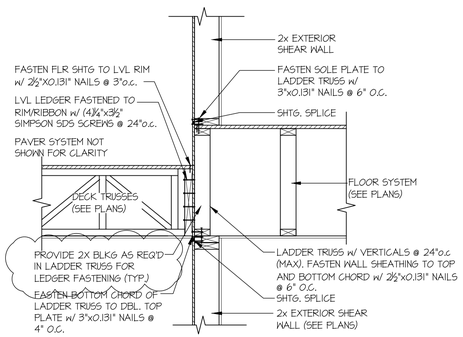

39 SECTION
SCALE: 3/4"=1'-0"

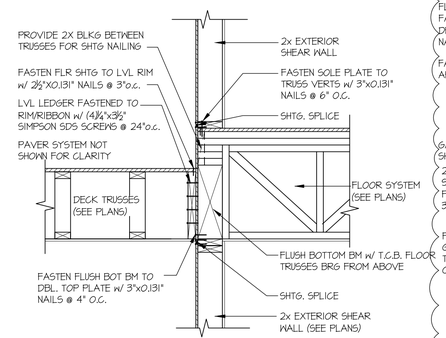

40 SECTION
SCALE: 3/4"=1'-0"

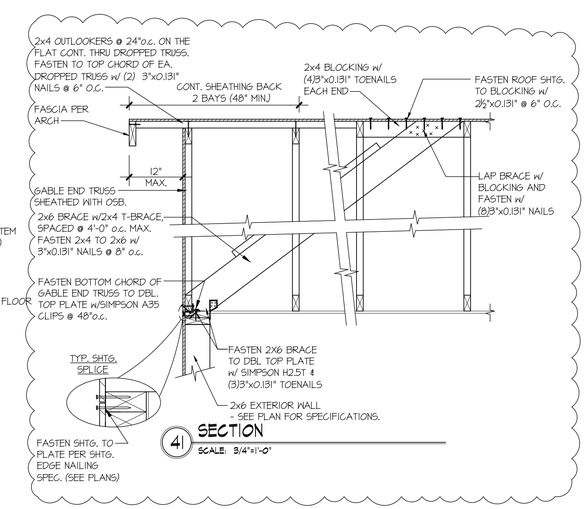

41 SECTION
SCALE: 3/4"=1'-0"

seal:

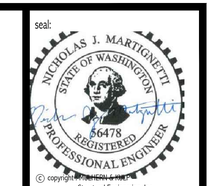

© copyright MULHERN + KULP Structural Engineering, Inc.

MULHERN+KULP
RESIDENTIAL STRUCTURAL ENGINEERING
7220 Trade Street, Suite 350, San Diego, CA 92121
p 619-650-0010 • mulhernkulp.com

M&K project number: 244-20019

project mgr:	NJM
drawn by:	NJD
issue date:	12-22-20

REVISIONS:

date:	initial:
04/28/22 FOUNDATION WALL REVISIONS	BFD
10/17/22 PLAN REVIEW COMMENTS	RJD

McCULLOUGH ARCHITECTS

STRUCTURAL DETAILS

BARCELO HOMES
7216 93RD AVE. SE
MERCER ISLAND, WASHINGTON

sheet:

SD-4

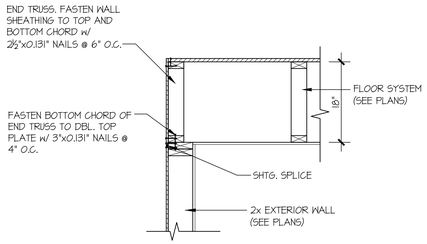

42 SECTION
SCALE: 3/4"=1'-0"

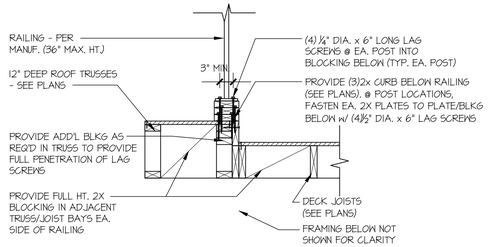

43 SECTION
SCALE: 3/4"=1'-0"

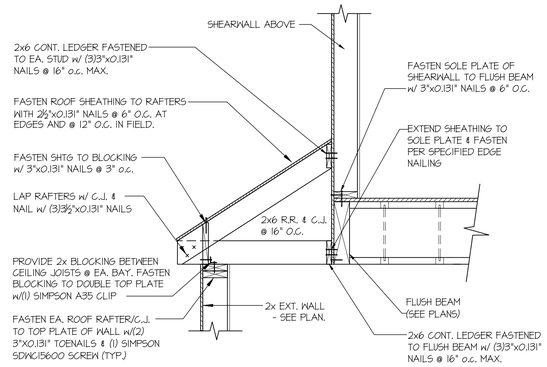

44 SECTION
SCALE: 3/4"=1'-0"

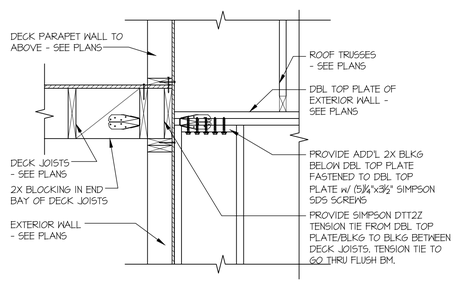

46 SECTION
SCALE: 3/4"=1'-0"

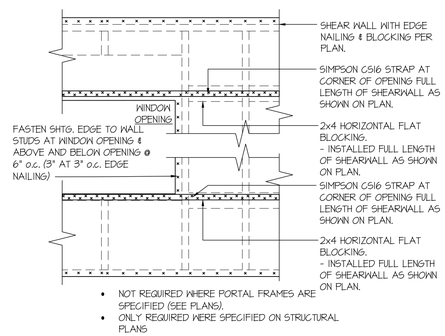

- NOT REQUIRED WHERE PORTAL FRAMES ARE SPECIFIED (SEE PLANS).
- ONLY REQUIRED WERE SPECIFIED ON STRUCTURAL PLANS

94 EXT. WALL & INT. SHEARWALL OPENING ELEVATION
SCALE: NTS

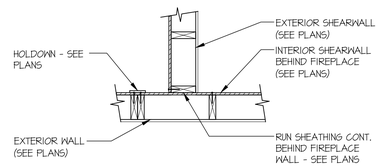

95 SHEAR TRANSFER DETAIL @ INTERSECTING INT. SHEARWALL
SCALE: 3/4"=1'-0"
SHTG. ON SAME FACE

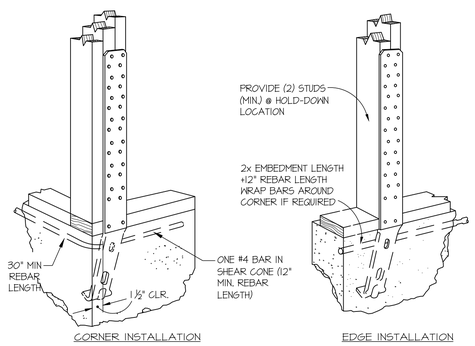

A TYPICAL HOLD-DOWN INSTALLATION
NOT TO SCALE
SIMPSON STHD HD @ FOUNDATION

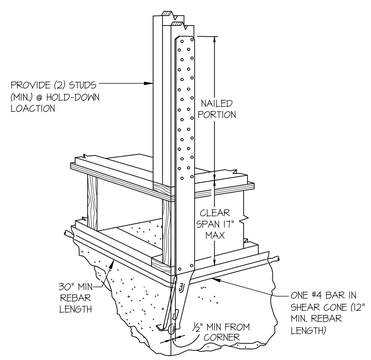

B TYPICAL HOLD-DOWN INSTALLATION
NOT TO SCALE
SIMPSON STHD HD @ FLOOR FRAMING

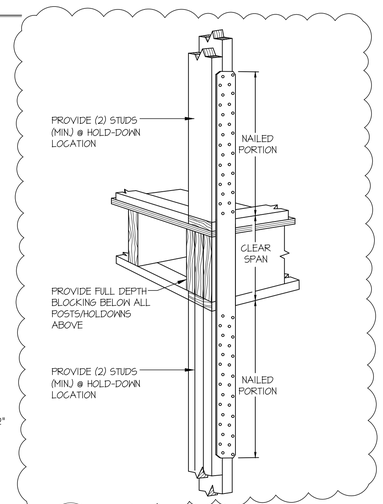

C TYPICAL HOLD-DOWN INSTALLATION
NOT TO SCALE
SIMPSON STRAP HD @ FLOOR FRAMING

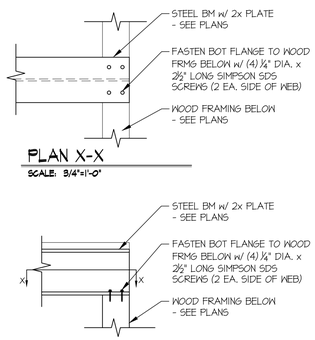

PLAN X-X
SCALE: 3/4"=1'-0"

D STL BM TO WOOD FRMG CONNECTION
SCALE: 3/4"=1'-0"

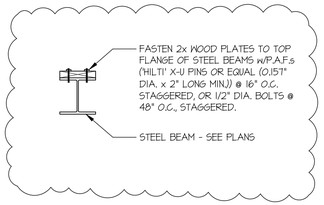

E 2X PLATE TO STL BM TOP FLANGE
SCALE: 3/4"=1'-0"

seal:
NICHOLAS J. MARTIGNETTI
STATE OF WASHINGTON
56478
REGISTERED
PROFESSIONAL ENGINEER

© copyright : MULHERN + KULP Structural Engineering, Inc.

MULHERN+KULP
RESIDENTIAL STRUCTURAL ENGINEERING
7220 Trade Street, Suite 350, San Diego, CA 92121
p 619-650-0010 • mulhernkulp.com

M&K project number: 244-20019

project mgr: NJM
drawn by: NJD
issue date: 12-22-20

REVISIONS:

date:	initial:
04/28/22 FOUNDATION WALL REVISIONS	BFD
10/17/22 PLAN REVIEW COMMENTS	RJD

McCULLOUGH ARCHITECTS

STRUCTURAL DETAILS

BARCELO HOMES
7216 93RD AVE. SE
MERCER ISLAND, WASHINGTON

sheet:
SD-5

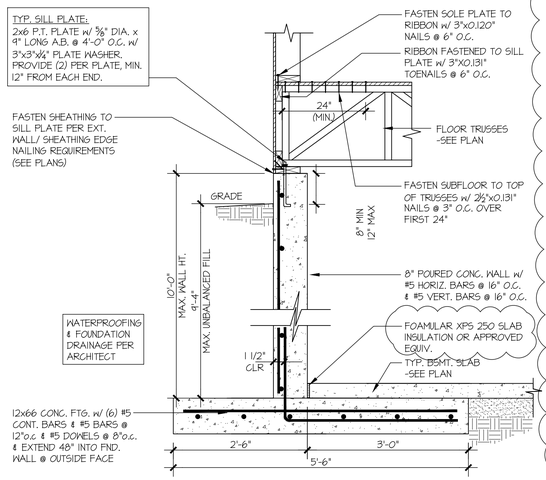

1 TYPICAL CONCRETE BSMT. FND. WALL
SCALE: 3/4"=1'-0"

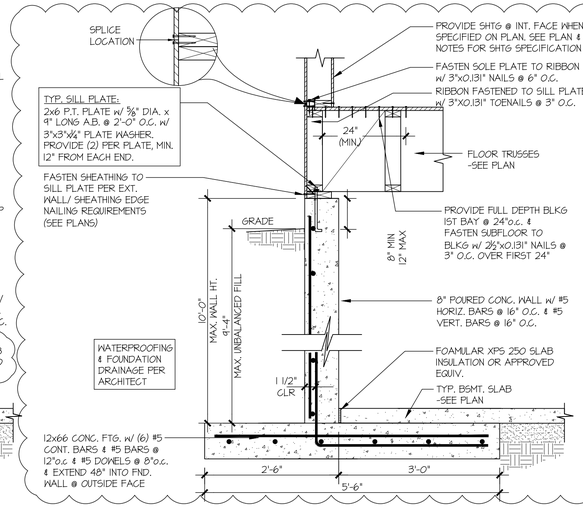

2 TYPICAL CONCRETE BSMT. FND. WALL
SCALE: 3/4"=1'-0"

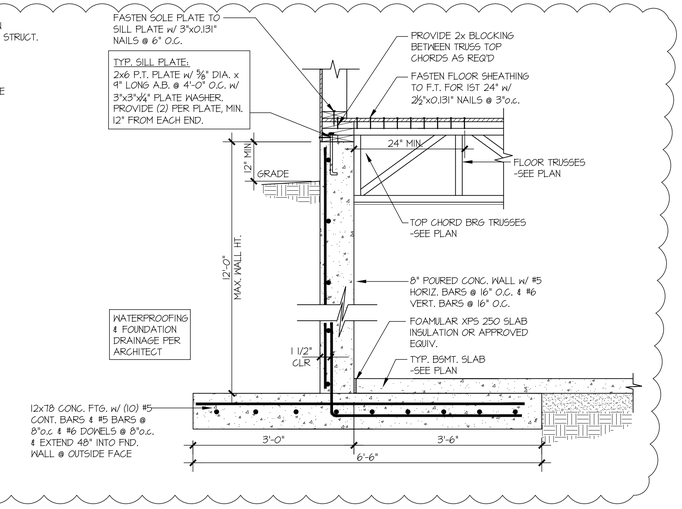

3 TYPICAL CONCRETE BSMT. FND. WALL
SCALE: 3/4"=1'-0"

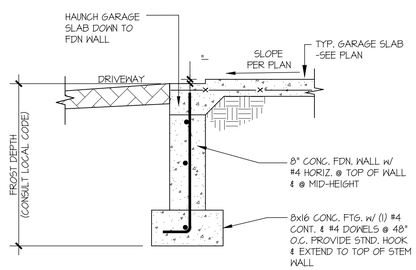

4 TYPICAL CONCRETE FOOTING @ GARAGE DOOR OPENING
SCALE: 3/4"=1'-0"

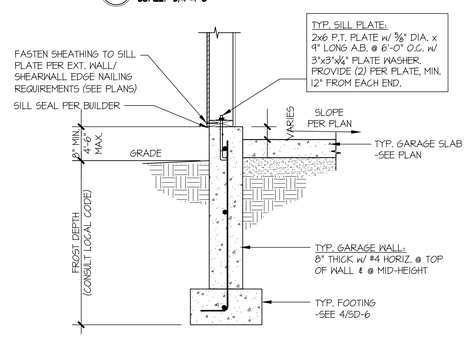

5 TYPICAL EXT. GARAGE FOUNDATION
SCALE: 3/4"=1'-0"

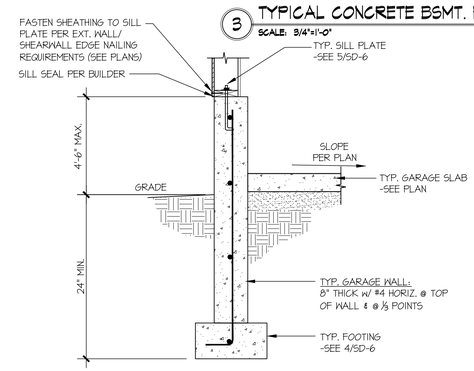

5A TYPICAL EXT. GARAGE FOUNDATION
SCALE: 3/4"=1'-0"

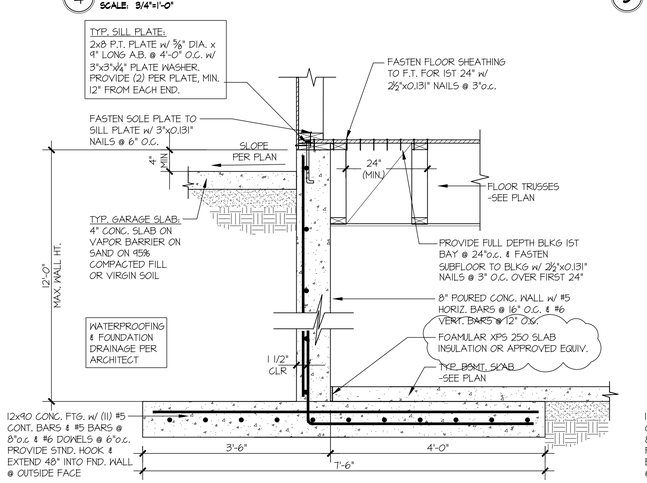

6 TYPICAL BASEMENT WALL @ GARAGE
SCALE: 3/4"=1'-0"

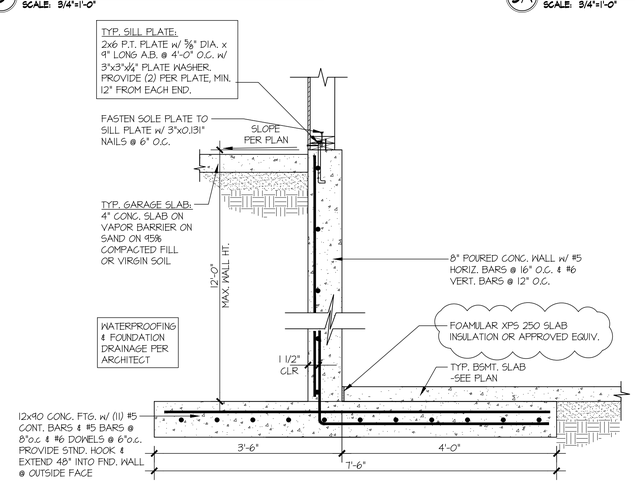

6A TYPICAL BASEMENT WALL @ STAIRS
SCALE: 3/4"=1'-0"

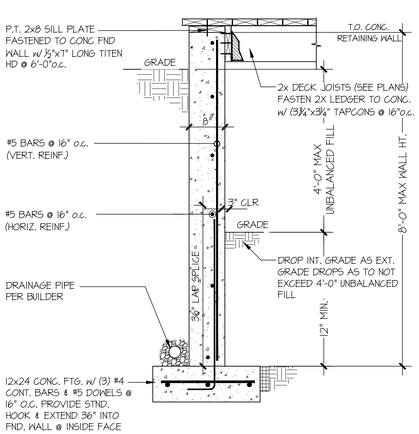

7 TYPICAL FOUNDATION @ DECK
SCALE: 3/4"=1'-0"

seal:
NICHOLAS J. MARTINOLETTI
STATE OF WASHINGTON
56478
REGISTERED
PROFESSIONAL ENGINEER

© copyright : MULHERN+KULP Structural Engineering, Inc.

MULHERN+KULP
RESIDENTIAL STRUCTURAL ENGINEERING
7220 Trade Street, Suite 350, San Diego, CA 92121
p 619-650-0010 • mulhernkulp.com

M&K project number: 244-20019

project mgr:	NJM
drawn by:	NJD
issue date:	12-22-20

REVISIONS:

date:	initial:
04/28/22	BFD
FOUNDATION WALL REVISIONS	
10/17/22	RJD
PLAN REVIEW COMMENTS	

McCullough Architects

Foundation Details

Barcelo Homes
7216 93rd Ave. SE
Mercer Island, Washington

sheet:
SD-6

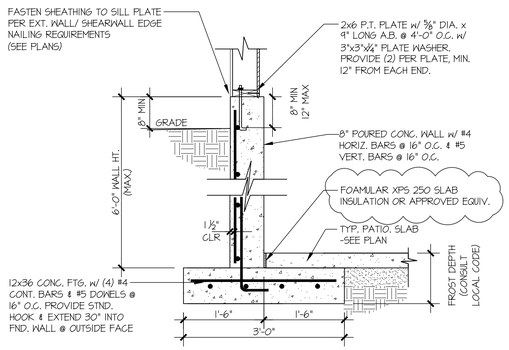

8 CANTILEVERED FOUNDATION WALL
SCALE: 3/4"=1'-0"

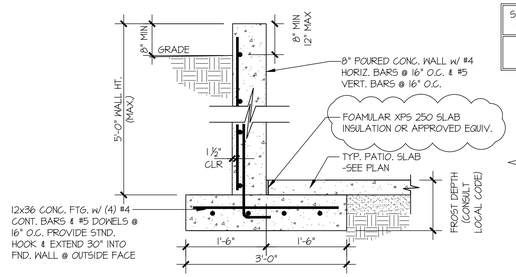

9 CANTILEVERED FOUNDATION WALL
SCALE: 3/4"=1'-0"

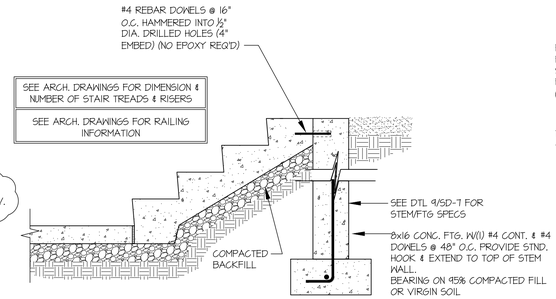

10 TYPICAL CONCRETE STEPS
SCALE: 3/4"=1'-0"

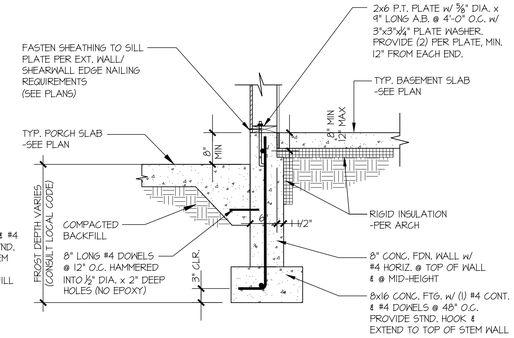

11 TYPICAL FOOTING @ SLAB ON GRADE
SCALE: 3/4"=1'-0"

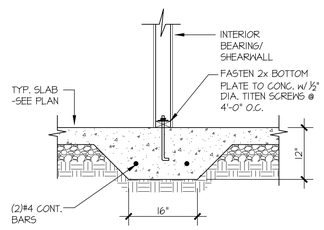

12 TYPICAL THICKENED SLAB @ INTERIOR BEARING WALL
SCALE: 3/4"=1'-0"

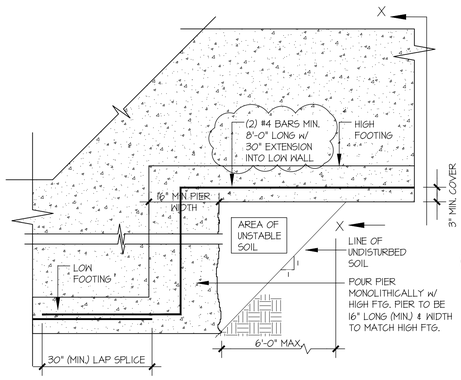

13 TYPICAL STEPPED FOOTING
SCALE: 3/4"=1'-0"

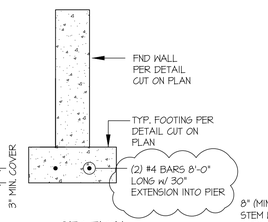

X-X SECTION
SCALE: 3/4"=1'-0"

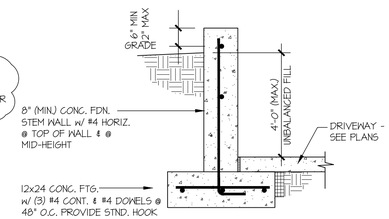

14 FOUNDATION WALL @ GARAGE
SCALE: 3/4"=1'-0"

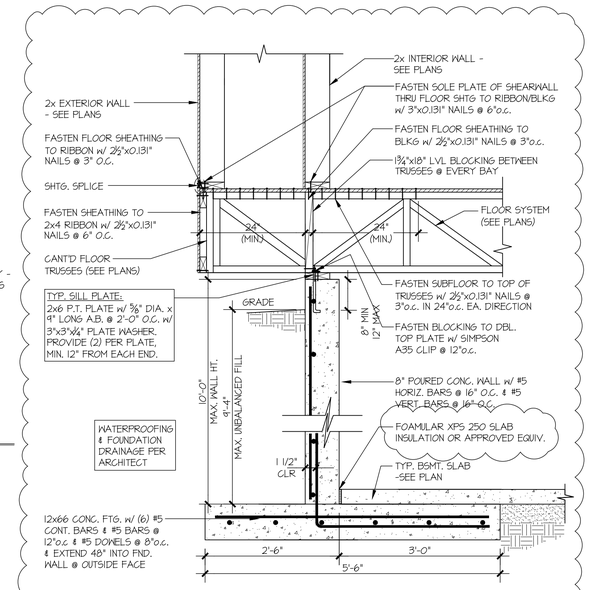

15 CONCRETE BSMT. FND. WALL
SCALE: 3/4"=1'-0"

seal:

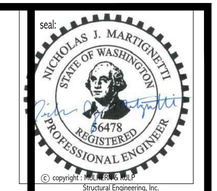

© copyright : MULHERN + KULP Structural Engineering, Inc.

MULHERN+KULP
RESIDENTIAL STRUCTURAL ENGINEERING
7220 Trade Street, Suite 350, San Diego, CA 92121
p 619-650-0010 • mulhernkulp.com

M&K project number: 244-20019

project mgr:	NJM
drawn by:	NJD
issue date:	12-22-20

REVISIONS:

date:	initial:
04/28/22 FOUNDATION WALL REVISIONS	BFD
10/17/22 PLAN REVIEW COMMENTS	RJD

McCullough Architects

Foundation Details

Barcelo Homes
7216 93rd Ave. SE
Mercer Island, Washington

sheet:

SD-7

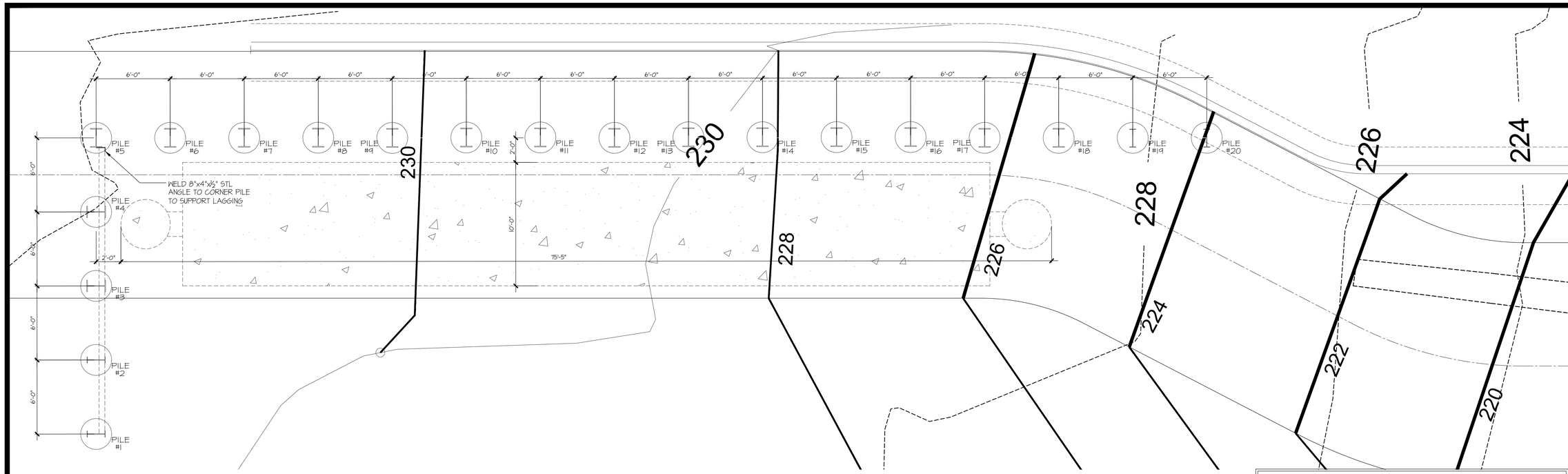

DRILLED SOLDIER PILE SCHEDULE				
PILE #	EXPOSED HEIGHT "H"	EMBED "D"	PILE SECTION	PILE (dia.)
#1	5'-0"	8'-0"	W18x35	30"
#2	11'-0"	17'-0"	W18x35	30"
#3-16	15'-0"	25'-0"	W18x86	30"
#17-18	13'-0"	25'-0"	W18x86	30"
#19	7'-0"	12'-0"	W18x35	30"
#20	1'-0"	4'-0"	W18x35	30"

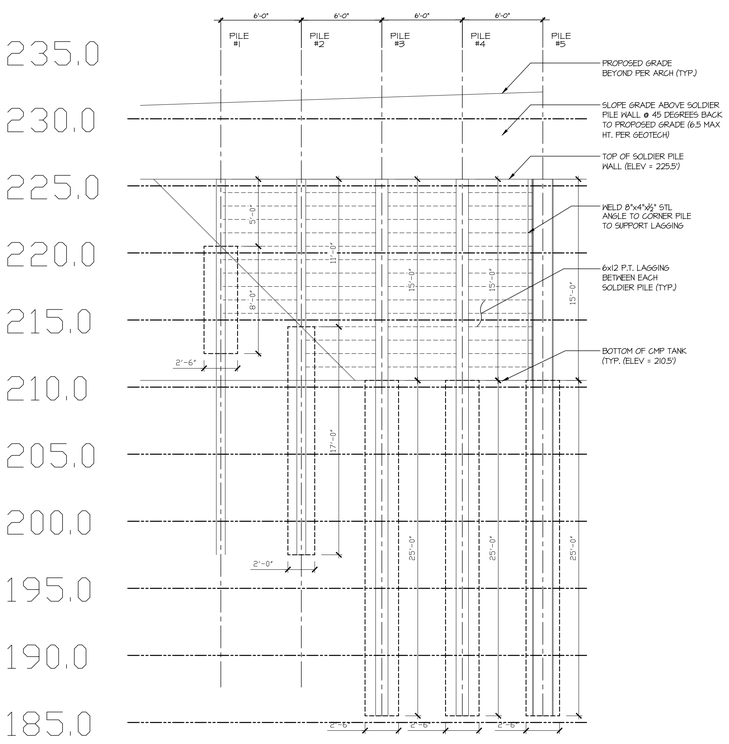

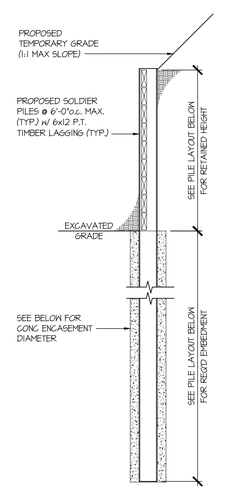

A SOLDIER PILE WALL TYP. DTL
SCALE: 1/4"=1'-0"

NOTES:
-DESIGN ASSUMPTIONS ARE BASED ON PARAMETERS PROVIDED IN THE GEOTECHNICAL DESIGN ADDENDUM FOR TEMPORARY SHORING PREPARED BY ROBERT M. PRIDE, DATED 12/17/21,
-TIMBER LAGGING SHALL BE INSTALLED IN MAXIMUM 4 FOOT LIFTS AS EXCAVATION IS ADVANCED.
-OVER-BREAK OR GAPS BETWEEN EXCAVATED SOIL FACE AND THE BACK OF LAGGING MUST BE FILLED FOLLOWING EACH EXCAVATION LIFT w/ A SAND SLURRY, PEA GRAVEL, CLEAN CRUSHED ROCK OR DRAIN ROCK TO MINIMIZE VOIDS
-SHORING WALLS SHOULD BE PROVIDED WITH ADEQUATE DRAINAGE. CONSTRUCTION DEWATERING SHALL BE COORDINATED BY GEOTECH/CONTRACTOR.
-SHORING MONITORING PROGRAM SHALL BE IMPLEMENTED PRIOR TO START OF CONSTRUCTION.

DEFLECTION MONITORING:
DEFLECTION OF STEEL PILE TIP TO BE MONITORED 2X/WEEK TO ENSURE EXCESSIVE DEFLECTIONS DO NOT OCCUR. MAX TIP DEFLECTION TO BE ¾" FROM INITIAL LOCATION, AND NOT TO EXCEED ½" OF DEFLECTION IN A TWO WEEK TIME PERIOD. CONTACT M+K & GEOTECHNICAL ENGINEER FOR EVALUATION IF DEFLECTION EXCEEDS MAXIMUMS PROVIDED.

SPECIAL INSPECTIONS PER IBC TABLE 1705.8
-THE INSPECTION OF DRILLING OPERATIONS
-VERIFICATION OF PLACEMENT LOCATIONS AND PLUMBNESS
-CONFIRM ELEMENT DIAMETERS, BELL DIAMETERS (IF APPLICABLE), LENGTHS, EMBEDMENT INTO BEDROCK (IF APPLICABLE) AND ADEQUATE END-BEARING STRATA CAPACITY.
-RECORD CONCRETE OR GROUT VOLUMES

DESIGN CRITERIA:
TEMPORARY SOLDIER PILE WALL:
- 55 PCF ACTIVE PRESSURE
- 350 PCF PASSIVE PRESSURE
- BACKFILL SLOPE OF 45 DEGREES
- ARCHING FACTOR OF 2.0
- NO SURCHARGE APPLIED

seal:
NICHOLAS J. MARTINETTI
STATE OF WASHINGTON
56478
REGISTERED
PROFESSIONAL ENGINEER

© copyright : MULHERN + KULP Structural Engineering, Inc.

MULHERN+KULP
RESIDENTIAL STRUCTURAL ENGINEERING
7220 Trade Street, Suite 350, San Diego, CA 92121
p 619-650-0010 • mulhernkulp.com

M&K project number: 244-20019

project mgr: NJM
drawn by: NJD
issue date: 12-22-20

REVISIONS:

date:	initial:
04/28/22 FOUNDATION HALL REVISIONS	BFD
10/17/22 PLAN REVIEW COMMENTS	RJD

McCullough Architects

Foundation Details

Barcelo Homes
7216 93rd Ave. SE
Mercer Island, Washington

sheet:
SP-1

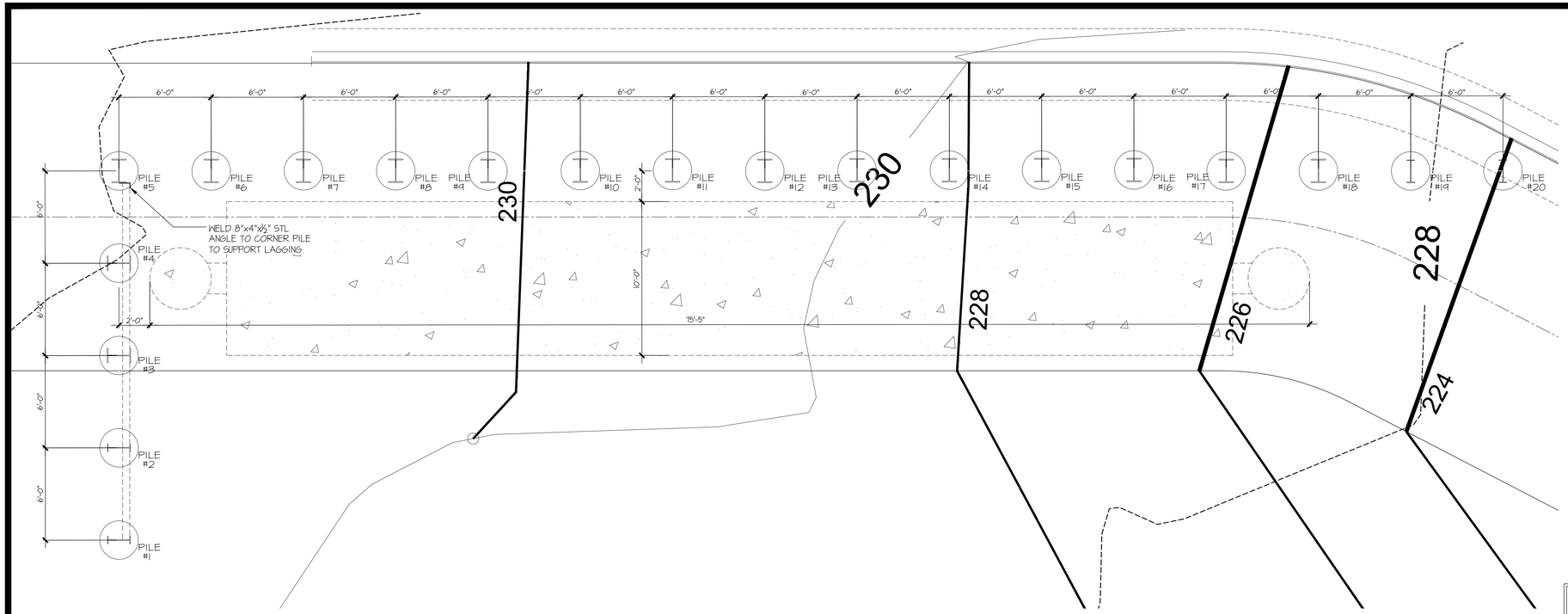

DRILLED SOLDIER PILE SCHEDULE				
PILE #	EXPOSED HEIGHT "H"	EMBED "D"	PILE SECTION	PILE (dia.)
#1	5'-0"	8'-0"	W18x35	30"
#2	11'-0"	17'-0"	W18x35	30"
#3-16	15'-0"	25'-0"	W18x86	30"
#17-18	13'-0"	25'-0"	W18x86	30"
#19	7'-0"	12'-0"	W18x35	30"
#20	1'-0"	4'-0"	W18x35	30"

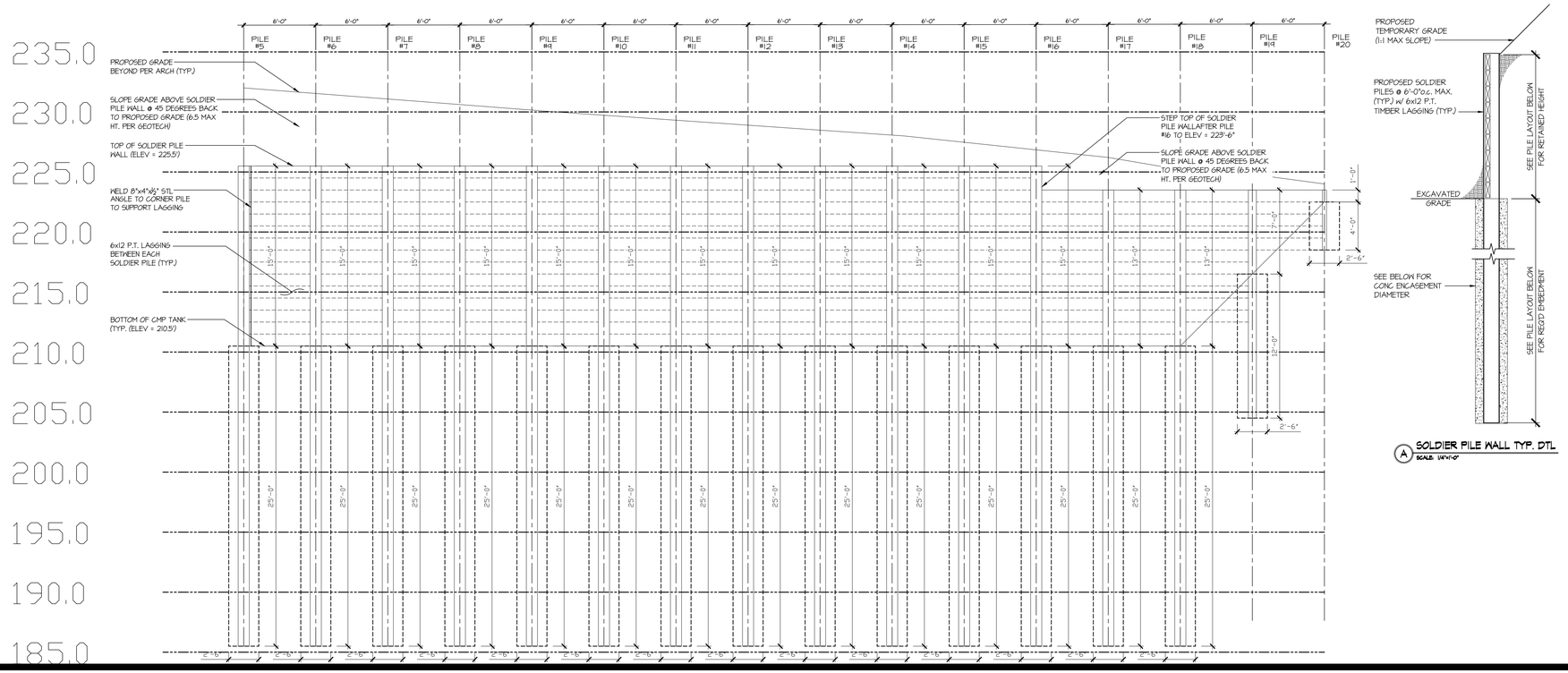

NOTES:
-DESIGN ASSUMPTIONS ARE BASED ON PARAMETERS PROVIDED IN THE GEOTECHNICAL DESIGN ADDENDU,M FOR TEMPORARY SHORING PREPARED BY ROBERT M. PRIDE, DATED 12/17/21,
-TIMBER LAGGING SHALL BE INSTALLED IN MAXIMUM 4 FOOT LIFTS AS EXCAVATION IS ADVANCED.
-OVER-BREAK OR GAPS BETWEEN EXCAVATED SOIL FACE AND THE BACK OF LAGGING MUST BE FILLED FOLLOWING EACH EXCAVATION LIFT w/ A SAND SLURRY, PEA GRAVEL, CLEAN CRUSHED ROCK OR DRAIN ROCK TO MINIMIZE VOIDS
-SHORING WALLS SHOULD BE PROVIDED WITH ADEQUATE DRAINAGE. CONSTRUCTION DEWATERING SHALL BE COORDINATED BY GEOTECH/CONTRACTOR.
-SHORING MONITORING PROGRAM SHALL BE IMPLEMENTED PRIOR TO START OF CONSTRUCTION.

DEFLECTION MONITORING:
DEFLECTION OF STEEL PILE TIP TO BE MONITORED 2X/WEEK TO ENSURE EXCESSIVE DEFLECTIONS DO NOT OCCUR. MAX TIP DEFLECTION TO BE ¾" FROM INITIAL LOCATION, AND NOT TO EXCEED ½" OF DEFLECTION IN A TWO WEEK TIME PERIOD. CONTACT M+K & GEOTECHNICAL ENGINEER FOR EVALUATION IF DEFLECTION EXCEEDS MAXIMUMS PROVIDED.

SPECIAL INSPECTIONS PER IBC TABLE 1705.8
-THE INSPECTION OF DRILLING OPERATIONS
-VERIFICATION OF PLACEMENT LOCATIONS AND PLUMBNESS
-CONFIRM ELEMENT DIAMETERS, BELL DIAMETERS (IF APPLICABLE), LENGTHS, EMBEDMENT INTO BEDROCK (IF APPLICABLE) AND ADEQUATE END-BEARING STRATA CAPACITY.
-RECORD CONCRETE OR GROUT VOLUMES

DESIGN CRITERIA:
TEMPORARY SOLDIER PILE WALL:
- 55 PCF ACTIVE PRESSURE
- 350 PCF PASSIVE PRESSURE
- BACKFILL SLOPE OF 45 DEGREES
- ARCHING FACTOR OF 2.0
- NO SURCHARGE APPLIED

seal:
NICHOLAS J. MARTIGNETTI
STATE OF WASHINGTON
56478
REGISTERED
PROFESSIONAL ENGINEER

© copyright : MULHERN + KULP Structural Engineering, Inc.

MULHERN+KULP
RESIDENTIAL STRUCTURAL ENGINEERING
7220 Trade Street, Suite 350, San Diego, CA 92121
p 619-650-0010 • mulhernkulp.com

M&K project number: 244-20019

project mgr: NJM
drawn by: NJD
issue date: 12-22-20

REVISIONS:

date:	initial:
04/28/22 FOUNDATION HALL REVISIONS	BFD
10/17/22 PLAN REVIEW COMMENTS	RJD

McCullough Architects

Foundation Details

Barcelo Homes
7216 93rd Ave. SE
Mercer Island, Washington

sheet:
SP-2

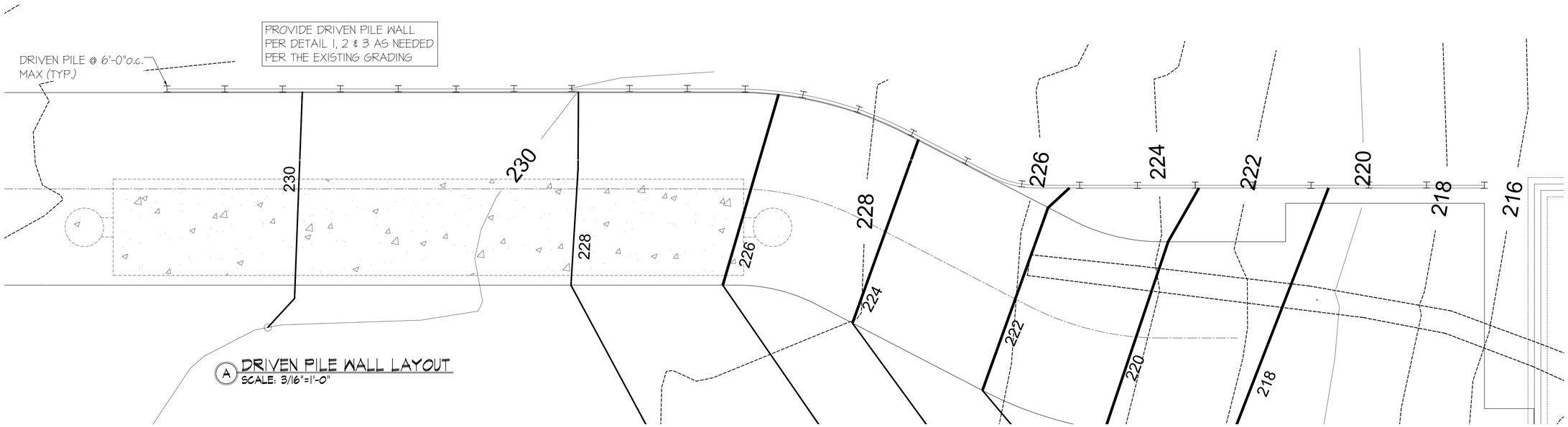

A DRIVEN PILE WALL LAYOUT
SCALE: 3/16"=1'-0"

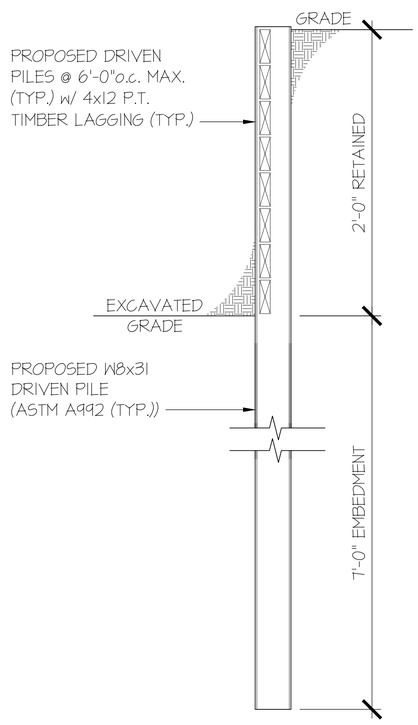

1 DRIVEN PILE WALL (2'-0" RETAINING)
SCALE: 1/2"=1'-0"

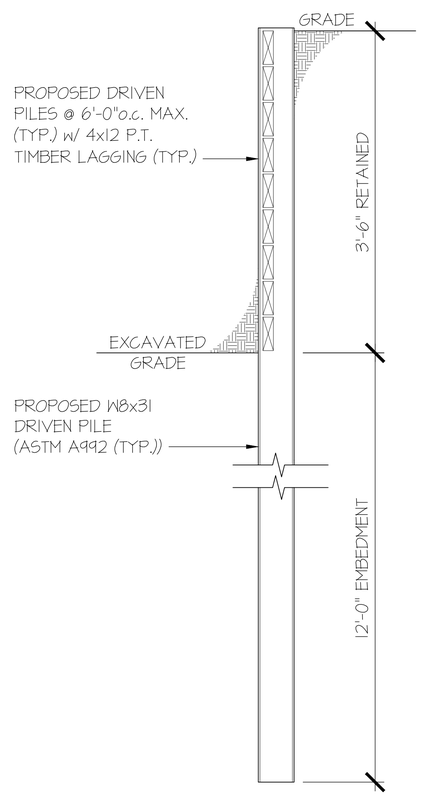

2 DRIVEN PILE WALL (3'-6" RETAINING)
SCALE: 1/2"=1'-0"

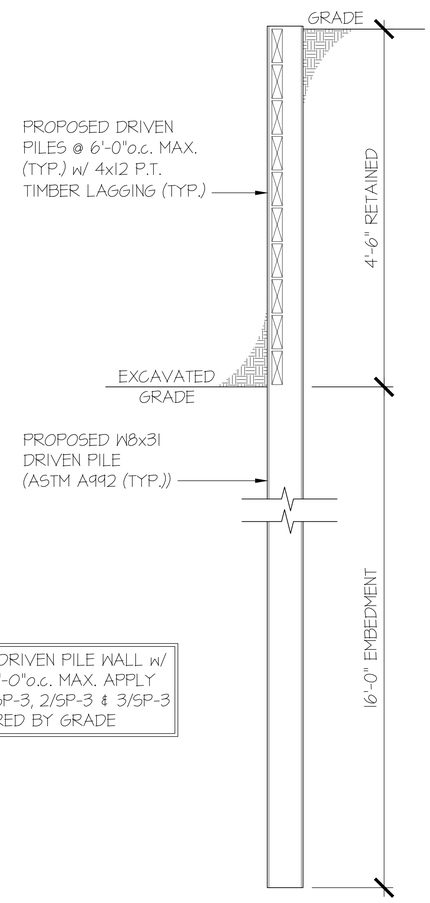

3 DRIVEN PILE WALL (4'-6" RETAINING)
SCALE: 1/2"=1'-0"

PROVIDE DRIVEN PILE WALL w/
PILES @ 6'-0"o.c. MAX. APPLY
DETAIL 1/SP-3, 2/SP-3 & 3/SP-3
AS REQUIRED BY GRADE

NOTES:
-DESIGN ASSUMPTIONS ARE BASED ON PARAMETERS PROVIDED BY THE GEOTECH
-TIMBER LAGGING SHALL BE INSTALLED IN MAXIMUM 4 FOOT LIFTS AS EXCAVATION IS ADVANCED.
-OVER-BREAK OR GAPS BETWEEN EXCAVATED SOIL FACE AND THE BACK OF LAGGING MUST BE FILLED FOLLOWING EACH EXCAVATION LIFT w/ A SAND SLURRY, PEA GRAVEL, CLEAN CRUSHED ROCK OR DRAIN ROCK TO MINIMIZE VOIDS
-SHORING WALLS SHOULD BE PROVIDED WITH ADEQUATE DRAINAGE. CONSTRUCTION DEWATERING SHALL BE COORDINATED BY GEOTECH/CONTRACTOR.
-SHORING MONITORING PROGRAM SHALL BE IMPLEMENTED PRIOR TO START OF CONSTRUCTION.

DEFLECTION MONITORING:
DEFLECTION OF STEEL PILE TIP TO BE MONITORED 2X/WEEK TO ENSURE EXCESSIVE DEFLECTIONS DO NOT OCCUR. MAX TIP DEFLECTION TO BE ¾" FROM INITIAL LOCATION, AND NOT TO EXCEED ½" OF DEFLECTION IN A TWO WEEK TIME PERIOD. CONTACT M+K & GEOTECHNICAL ENGINEER FOR EVALUATION IF DEFLECTION EXCEEDS MAXIMUMS PROVIDED.

SPECIAL INSPECTIONS PER IBC TABLE 1705.8
-VERIFICATION OF PLACEMENT LOCATIONS AND PLUMBNESS
-CONFIRM ELEMENT LENGTHS, EMBEDMENT INTO BEDROCK (IF APPLICABLE) AND ADEQUATE END-BEARING STRATA CAPACITY.

DESIGN CRITERIA:
PERMANENT SOLDIER PILE WALL:
- 35 PCF ACTIVE PRESSURE
- 250 PCF PASSIVE PRESSURE
- BACKFILL SLOPE OF 0 DEGREES
- 8H SEISMIC SURCHARGE

seal:
NICHOLAS J. MARTIGNETTI
STATE OF WASHINGTON
56478
REGISTERED
PROFESSIONAL ENGINEER

© copyright : MULHERN + KULP Structural Engineering, Inc.

MULHERN+KULP
RESIDENTIAL STRUCTURAL ENGINEERING
7220 Trade Street, Suite 350, San Diego, CA 92121
p 619-650-0010 • mulhernkulp.com

M&K project number: 244-20019

project mgr: NJM
drawn by: NJD
issue date: 12-22-20

REVISIONS:

date:	initial:
04/28/22 FOUNDATION WALL REVISIONS	BFD
10/17/22 PLAN REVIEW COMMENTS	RJD

McCullough Architects

Foundation Details
Barcelo Homes
7216 93rd Ave. SE
Mercer Island, Washington

sheet:
SP-3

GENERAL NOTES

1) COMPLETE INSTALLATION OF THE MECHANICAL SYSTEM SHALL BE PER THE MOST CURRENT BUILDING, MECHANICAL, ENERGY, PLUMBING, FIRE AND HEALTH CODES AND REGULATIONS AS ADOPTED BY THE LOCAL JURISDICTIONS.
2) ALL AIR-CONDITIONING UNITS WITHOUT INTERNAL TRAP SHALL HAVE A P-TRAP FOR THE CONDENSATE PAN WITH PLUG TEES FOR CLEANING AND CONDENSATE PIPES SHALL BE DISCHARGED TO EXISTING CONDENSATE WASTE PIPING. VERIFY SIZE AND LOCATION AT SITE.
3) MECHANICAL CONTRACTOR SHALL COORDINATE DIFFUSER LOCATIONS AND DUCT ROUTING CLEARANCES WITH THE STRUCTURAL, REFLECTED CEILING AND LIGHTING PLANS.
4) PLUMBING CONTRACTOR SHALL COORDINATE PLUMBING VENT STACKS WITH THE EQUIPMENT TO MAINTAIN A MINIMUM OF 10 FT. FROM THE OUTSIDE AIR INTAKES.
5) ALL FIRE RATED STRUCTURE SHALL BE FIRE DAMPERED. VERIFY WITH THE ARCHITECTURAL AND INSTALL PER THE LOCAL JURISDICTIONS.
6) ALL AIR DISTRIBUTION OUTLETS SHALL HAVE VOLUME CONTROL DEVICES.
7) ALL VOLUME DAMPERS IN NON-ACCESSIBLE CEILINGS SHALL HAVE A CONTROL ARM EXTENDED TO AN ACCESSIBLE LOCATION ("YOUNG" REGULATORS OR ROTO-TWIST). EXACT LOCATION OF CONTROL DEVICES VISIBLE IN FINISHED SPACES SHALL BE COORDINATED WITH THE ARCHITECT.
8) ALL 90 DEGREE TRUNK DUCT ELBOWS SHALL BE SMOOTH-ROUND OR SQUARE WITH TURNING VANES.
9) MECHANICAL CONTRACTOR SHALL LOCATE AND COORDINATE EXACT LOCATION OF PIPING AND DUCTWORK AND PENETRATIONS WITH THE STRUCTURE.
10) MAXIMUM LENGTH OF FLEXIBLE DUCTS SHALL BE 6' OR AS SHOWN ON DRAWINGS.
11) ALL DUCTWORK, EQUIPMENT AND PIPING SHALL BE SEISMICALLY SUPPORTED PER SMACNA AND LOCAL REGULATIONS.
12) ALL AIR FILTERS SHALL HAVE EFFICIENCY BASED ON THE ASHRAE STANDARD 52-76 (ATMOSPHERIC DUST SPOT).
13) ALL MECHANICAL EQUIPMENT SHALL CONFORM TO SMACNA AND LOCAL REGULATIONS FOR SEISMIC RESTRAINT (INCLUDING PIPING AND DUCTWORK).
14) ALL EQUIPMENT AND ACCESSORIES IN CONCEALED SPACES REQUIRING ACCESS SHALL HAVE ACCESS DOORS.
15) TOTAL SYSTEM SHALL BE WARRANTED FOR ONE YEAR; STARTING FROM THE TIME OF OWNER/ENGINEER'S FINAL ACCEPTANCE.
16) HVAC NOTES:
    - A) PROVIDE FLEXIBLE CONNECTION IN ALL DUCTS CONNECTING TO AIR MOVING EQUIPMENT AS CLOSE TO FAN AS POSSIBLE. FLEXIBLE CONNECTION SHALL CONSIST OF 6" OR MORE OF AIR TIGHT, FIREPROOF FLEXIBLE NEOPRENE COATED WOVEN FIBROUS GLASS MATERIAL. VENT FABRICS, INC.
    - B) ALL DUCTWORK SHALL BE SHEET METAL. SOUND LINE RECTANGULAR SUPPLY AND RETURN DUCTS WITHIN 10 FEET FROM THE UNIT OPENINGS.
    - C) ALL SUPPLY AND RETURN FLEXIBLE DUCTS SHALL BE CONSTRUCTED OF DOUBLE LAMINATION OF POLYESTER ENCAPSULATED STEEL WIRE HELIX FOR INNER CORE HIGH DENSITY FIBERGLASS INSULATION AND GRAY POLYESTER FILM WITH SPIRAL REINFORCEMENTS EQUAL TO "ATCO-70 SERIES" (MIN. POS. PRESS. = 6" W.G., NEG. PRESS = 0.75" W.C.).
    - D) PROVIDE LOCKABLE VOLUME DAMPERS IN ALL AIR DISTRIBUTION OUTLETS.
    - E) DUCT HANGERS, SUPPORTS AND METHODS OF INSTALLATION SHALL CONFORM TO ASHRAE AND SMACNA RECOMMENDATIONS.
    - F) DUCT SIZES SHOWN ON PLANS INDICATE INSIDE FREE AREA.
    - G) ALL DUCTWORK SHALL BE CLASS 1 AIR DUCT AS APPROVED BY U.L.-181.
    - H) DUCTS - SHEET METAL DUCTS SHALL BE INSULATED WITH THE INSULATION AND THICKNESSES AS SHOWN HEREIN (REDUCE THE INSULATION THICKNESS BY THERMAL VALUE OF SOUND LINING).
        1. SUPPLY AIR DUCTS IN HEATED SPACE; NO INSULATION REQUIRED IF SOUNDLINED, OTHERWISE 1" THICK K = 0.23 @ 75 DEGREES F.
        2. SUPPLY AIR DUCTS IN NON-HEATED SPACE; APPROXIMATELY 3" THICK K=0.23 @ 75 DEGREES F., TO PROVIDE A MINIMUM THERMAL RESISTANCE VALUE OF MINIMUM R-11.
        3. SUPPLY AIR DUCTS OUTSIDE OF BUILDING SAME AS CONDITIONED SPACE EXCEPT WITH WEATHERPROOF BARRIER.
        4. RETURN AIR DUCTS; SHALL HAVE SAME INSULATION AS THE SUPPLY AIR DUCTS.
        5. EXHAUST AIR DUCTS; NO INSULATION REQUIRED.
        6. INDOOR DUCTS HANDLING OUTSIDE AIR SHALL HAVE FIBERGLASS BLANKET WITH VAPOR BARRIER JACKET ASJ, 1" THICK, K = 0.23 @ 75 DEGREES F. (ALL DUCTWORK FOR THE BUILDING SUPPLY FAN AND OUTSIDE AIR INTAKES TO INDIVIDUAL HEAT PUMPS).
17) THE CONTRACTOR SHALL NOT OPERATE THE EQUIPMENT FOR TEMPORARY HEATING OR VENTILATION DURING THE CONSTRUCTION. (ALL EQUIPMENT SHALL RUN FOR TESTING AND BALANCING PURPOSES ONLY). NOTIFY THE ENGINEER 48 HOURS (MINIMUM) IN ADVANCE TO ARRANGE A FINAL FIELD INSPECTION PRIOR TO COVERING UP THE CEILING.
18) CONTRACTOR IS TO BRING UP THE DISCREPANCIES AND ITEMS WHICH ARE NOT SPECIFICALLY CALLED FOR OR SHOWN BUT ARE REQUIRED FOR A COMPLETE MECHANICAL SYSTEM AND AFFECT HIS CONTRACT PRIOR TO ENTERING AND SIGNING THE CONTRACT; AFTER AWARDING THE CONTRACT ALL SUCH ITEMS REQUIRED FOR A COMPLETE SYSTEM READY FOR THE OWNER'S BENEFICIAL USE SHALL BE FURNISHED AND INSTALLED INCLUDING ALL SUCH DISCREPANCY ITEMS MENTIONED ABOVE, AT NO ADDITIONAL COST TO THE OWNER AND PER LOCAL CODES. MANUFACTURER'S RECOMMENDATIONS AND APPLICABLE STANDARDS WITH THE ARCHITECT/ENGINEER'S APPROVAL.
19) ALL EQUIPMENT SUPPLIED FOR THESE SPECIFICATIONS SHALL BE FREE FROM DEFECTS IN MATERIAL, WORKMANSHIP, AND TITLE, AND SHALL BE OF THE KIND AND QUALITY DESCRIBED HEREIN. IF IT APPEARS WITHIN ONE YEAR FROM DATE OF FINAL ACCEPTANCE THAT EQUIPMENT DOES NOT MEET THE WARRANTIES ABOVE, THE CONTRACTOR SHALL IMMEDIATELY CORRECT ANY DEFECT AND SHALL RESTORE THE SYSTEM TO THE ORIGINAL SATISFACTORY CONDITIONS AT HIS EXPENSE. THE FOREGOING WARRANTY IS EXCLUSIVE AND IN LIEU OF OTHER WARRANTIES, WHETHER WRITTEN, ORAL, IMPLIED OR STATUTORY. NO WARRANTY OF MERCHANT ABILITY OF FITNESS FOR PURPOSE SHALL APPLY. (THE WARRANTY SHALL START FROM THE TIME OF ARCHITECT/ENGINEER'S FINAL ACCEPTANCE.)
20) ENTIRE INSTALLATION OF ALL EQUIPMENT, CONTROL, PIPING, DUCTWORK AND RELATED ACCESSORIES SHALL BE PER BASIC OWNERS' STANDARDS. MECHANICAL CONTRACTOR IS TO FAMILIARIZE HIMSELF WITH THESE STANDARDS.
21) MECHANICAL CONTRACTOR SHALL VSIT THE SITE AND VERIFY THE ROUTING AND INSTALLATION FEASIBILITY OF ALL EQUIPMENT, PIPING AND DUCTWORK PRIOR TO SUBMITTING HIS BID AND INCLUDE IN HIS BID ADDITIONAL PIPING, DUCTWORK, FITTINGS, OFFSETS, ETC. WHICH MIGHT BE REQUIRED FOR A COMPLETE SYSTEM READY FOR OWNER'S BENEFICIAL USE.
22) COORDINATE THE CONSTRUCTION SCHEDULE WITH THE ARCHITECT AND PERFORM ALL REQUIRED WORK IN STRICT ACCORDANCE WITH THE OWNER'S SCHEDULE.
23) MECHANICAL CONTRACTOR SHALL PAY FOR AND OBTAIN ALL REQUIRED PERMITS AND CERTIFICATES REQUIRED BY THE AUTHORITIES HAVING JURISDICTION.
25) ADJUST ALL EQUIPMENT AND PERFORM A COMPLETE AIR-BALANCING AND PUT ALL MECHANICAL SYSTEMS IN OPERATION AND SUBMIT A COPY BALANCING REPORTS TO THE OWNER/ARCHITECT.

SPLIT HEAT PUMP SCHEDULE

DESIGNATION:	IHP-1	OHP-1	IHP-2	OHP-2	IHP-3A	IHP-3B	IHP-3C	OHP-3
ZONE/FLOOR:	UPPER LEVEL	UPPER LEVEL	MAIN LEVEL	MAIN LEVEL	BEDROOM	RECREATION RM	THEATRE	BASEMENT
MANUFACTURER:	TRANE	TRANE	TRANE	TRANE	MITSUBISHI	MITSUBISHI	MITSUBISHI	MITSUBISHI
MODEL:	TAM9A0C48V41	4TWR7048	TAM9A0C48V41	4TWR7048	MLZ-KP09NA	MLZ-KP12NA	MLZ-KP12NA	MXZ-3C30NA2
UNIT:	INDOOR	OUTDOOR	INDOOR	OUTDOOR	INDOOR	INDOOR	INDOOR	OUTDOOR
NOMINAL TONS	----	4.0	----	4.0	.75	1.0	1.0	2.5
COOLING * ARI (MBH):	----	47.60	----	47.60	9.0	12.0	12.0	15.1
HEATING * LOW ARI (MBH):	----	29.80	----	29.80	12.0	15.0	15.0	23.7
SEER:	----	17.0	----	17.0	----	----	----	19.0
COP (HSPF):	----	3.7	----	3.7	----	----	----	3.9 (10.6)
CFM:	1450	----	1450	----	212	297	297	----
E.S.P. (IN-H20):	.50"	----	.50"	----	.68 FLA	.68 FLA	.68 FLA	----
INDOOR FAN HP(FLA):	3/4	----	3/4	----	----	----	----	----
OUTDOOR FAN(FLA):	----	----	----	----	----	----	----	----
COMPRESSOR RLA/LRA:	----	21.2/104	----	21.2/104	----	----	----	INVERTER
HEATER (KW)	7.2	----	7.2	----	----	----	----	----
MCA/MOCP	34.6/50	28/45	34.6/50	28/45	1 AMP	1 AMP	1 AMP	22.1/25
VOLTAGE:	230	230	230	230	230	230	230	230
PHASE:	1	1	1	1	1	1	1	1
WEIGHT (LBS):	175	162	175	162	34	34	34	137
REMARKS:	(1)(2)(4)	(3)(4)(6)	(1)(2)(4)	(3)(4)(6)	(1)(2)(4)(7)	(1)(2)(4)(7)	(1)(2)(4)(7)	(3)(4)(6)(7)

(1) FULLY CASED COIL, WITH CONDENSATE DRAINS, REFRIGERANT PIPING CONNECTIONS..
(2) INSTALL UNIT AS SHOWN AND AS RECOMMENDED BY THE MANUFACTURER AND IN COMPLIANCE WITH LOCAL CODES.
(3) R410A REFRIGERANT, COMPRESSOR SHORT CYCLE PROTECTOR, HIGH/LOW PRESS. SWITCH, DEFROST CONTROL, FILTER DRIER AND LIQUID SOLENOID VALVE, THERMOSTATIC EXPANSION VALVE, SINGLE POINT ELECTRICAL CONNECTION CONSULT MANUFACTURER FOR ACCESSORIES REQUIRED DUE TO LOCATION OF INDOOR/OUTDOOR UNITS.
(4) EACH INDOOR/OUTDOOR UNIT SHALL HAVE THE STATE ENERGY CODE APPROVED CERTIFICATIONS IN ORDER TO MEET THE REQUIRED ENERGY RATINGS, TESTS & CERTIFICATIONS AS COMBINED UNITS.
(6) INCLUDE PROGRAMMABLE WSEC COMPLIANT THERMOSTAT.
(7) INCLUDE BRANCH BOX ACCESSORY.
NOTE: CONTRACTOR SHALL USE REFRIGERANT LONG LINE GUIDE FOR PIPE SIZING PER MANUFACTURER WHEN LINES EXCEED 50 FT IN LENGTH. VERIFY WITH MFG FOR EXACT SIZES.

FAN SCHEDULE

DESIGNATION:	EF-1
ZONE:	BATH/TOILET/LAUNDRY
MANUF.:	PANSONIC
MODEL:	FV-05-11VK2
TYPE:	CEILING
DRIVE:	DIRECT
CFM:	110
E.S.P. (IN-H20):	0.10"
SONES (dBA):	<0.3
HP FLA:	.10 AMPS
VOLTAGE:	120
PHASE:	1
WEIGHT:	-----
REMARKS:	(1)(2)

(1) SOURCE SPECIFIC FAN SHALL BE AMCA 210 OR HVI 916.
(2) CONTROLLED BY LIGHT SWITCH

ENERGY RECOVERY VENTILATOR (DOAS)

DESIGNATION:	ERV-1
ZONE:	BASEMENT
MANUF.:	LIFEBREATH
MODEL:	METRO 120F
DRIVE:	DIRECT
SUPPLY CFM:	60
EXHAUST CFM:	60
E.S.P. (IN-H20):	.50"
HEAT RECOVERY SENSIBLE EFF. (HEATING):	80%
ELECTRIC HEATER - KW.:	--
SUPPLY AIR TEMP (WINTER):	60 °F
HP:	--
MCA/MOCP:	154 WATTS
VOLTAGE:	120
PHASE:	1
WEIGHT:	--
REMARKS:	(1)

(1) ERV SHALL PROVIDE WHOLE HOUSE VENTILATION AND SHALL RUN CONTINUOUSLY.

Minimum Whole House Outside Air Ventilation Schedule 2018 IMC

Ventilation Rate per 2018 SMC 403.4.2

Equip. Tag	Zone Tag	Occupancy Category	Floor Area (sf)	0.01 x A floor	Number of Bedrooms (Min. of 1)	Minimum CFM Whole House Ventilation Rate (Min.)	Proposesd CFM Outdoor Air Intake Flow (Min. 30 cfm)
ERV-1	Residence	Residence	1709	17.1	1	25	60
IHP-1 & IHP-2	Residence	Residence	3910	39.1	5	77	400

LEGEND

SYMBOL	ABBREVIATION	DESCRIPTION
T/S	T'STAT/SENSOR	THERMOSTAT/SENSOR
	--	DUCTWORK W/ TURNING VANE AND FLEX CONN.
	VD	VOLUME DAMPER
	--	RIGID DUCT
	--	FLEXIBLE DUCT
	--	ROUND SPIN-IN WITH V.D.
	FD	1 HR FIRE DAMPER
	SFD	2 HR SMOKE FIRE DAMPER
	CFD	CEILING RADIATION FIRE DAMPER
	--	1 HR FIRE RATED WALL
	--	2 HR FIRE RATED WALL
	CD	SQUARE CEILING DIFFUSER
	CG	SQUARE CEILING GRILLE
CD	CD	CONDENSATE DRAIN LINE
	--	SMOKE DUCT DETECTOR
	A.F.F.	ABOVE FINISHED FLOOR

ENERGY CODE NOTES:

1) THERMOSTATS SHALL BE A 7 DAY PROGRAMMABLE TYPE WITH A 5 DEGREE DEADBAND AND AUTOMATIC SETBACK CONTROL PER R403.
2) HVAC EQUIPMENT SHALL MEET THE MINIMUM ENERGY EFFICIENCY RATINGS PER TABLES C403 WSEC.
3) DUCT INSULATION AND SEALING SHALL MEET WSEC SECTION R403.3 REQUIREMENTS.
4) PIPING INSULATION SHALL MEET THE REQUIREMENTS OF TABLE R403.4 WSEC.
5) OUTSIDE AIR DUCTS SHALL BE INSULATED PER WSEC R403.3.7. OUTSIDE AIR DUCTS SHALL HAVE A MOTORIZED DAMPERS OR AUTOMATIC DAMPER FOR ALL OUTSIDE AIR INTAKES 403.2.4.4 WSEC.

DESIGN CODES:

ALL CODES WITH WASHINGTON STATE AMENDMENTS

2018 RESIDENTIAL WASHINGTON STATE ENERGY CODE

2018 INTERNATIONAL MECHANICAL CODE

2018 UNIFORM PLUMBING CODE

2018 INTERNATIONAL FIRE CODE

SHEET INDEX

M1.0	GENERAL NOTES, LEGEND & SHEET INDEX
M2.0	LOWER LEVEL FLOOR PLAN - HVAC
M3.0	MAIN LEVEL FLOOR PLAN - HVAC
M4.0	UPPER LEVEL FLOOR PLAN - HVAC
M4.0	SPECIFICATIONS

ABOSSEIN ENGINEERING L.L.C

MECHANICAL- ELECTRICAL
CIVIL - LEED - STRUCTURAL
FIRE PROTECTION

18465 NE 68th St.
REDMOND, WA 98052

OFFICE: (425) 462-9441
FAX: (425) 462-9451

EMAIL:
CService@abossein.com

WEBSITE:
www.abossein.com

ALEXANDER ABOSSEIN
STATE OF WASHINGTON
PROFESSIONAL ENGINEER

LOT 1
7216 93RD AVE SE
MERCER ISLAND, WASHINGTON

SHEET TITLE:
GENERAL NOTES, SCHEDULES AND LEGEND

Revisions:	Date:
XX/XX/22 PERMIT SET	

Job No.: 222019
Date: 03/17/2022

M1.0

KEYED PLAN NOTES:

- (A) DUCTWORK SHALL BE FABRICATED AND SUPPORTED PER SMACNA LATEST EDITION OF DUCT CONSTRUCTION STANDARDS.
- (B) OUTSIDE AIR DUCT DUCTWORK WITH R-8 INSULATION .
- (C) HEAT PUMP COIL WITH CONDENSATE SUMP/PUMP, ROUTE ¾" CONDENSATE PIPING TO PLUMBING FIXTURE OR LANDSCAPING. (LITTLE GIANT VCMA 15 OR EQUAL)
- (D) FAN COIL WITH ¾" CONDENSATE PIPING TO CONDENSATE PUMP (LITTLE GIANT VCMA 15 OR EQUAL). ROUTE TO PLUMBING FIXTURE OR LANDSCAPING PER LOCAL JRSD.
- (E) INSULATED REFRIGERANT LINES, WALL PENETRATION SHALL FLASHED AND BE MADE WATER TIGHT.
- (F) 8"ø OUTSIDE AIR DUCT (200 CFM) WITH MOTORIZED DAMPER INTERLOCKED WITH FAN MOTOR AND WHOLE HOUSE TIMER PER IMC 403.4.6.4. FURNACE FAN TO CYCLE ON EVERY 2 HRS ON AND 2 HRS OFF. HEAT PUMP SHALL MAINTAIN THERMOSTAT SET POINTS (TYPICAL).
- (G) ALL SUPPLY REGISTERS SHALL HAVE CABLE VOLUME DAMPER (NO OPPOSED BLADE DAMPERS) OR MAY USE A AIRFLOW REGULATOR CARRII BY AMERICAN ALDES.
- (H) TERMINATE EXHAUST A MINIMUM OF 3 FT FROM OPERABLE OPENINGS (I.E. WINDOWS AND DOORS) AND 10 FT FROM OUTSIDE AIR INTAKES (TYPICAL).
- (I) MAIN DUCTWORK UP AND IN BETWEEN FLOOR TRUSSES (TYPICAL).
- (J) BRANCH DUCTWORK THRU FLOOR TRUSSES WEB OPENINGS (TYPICAL).
- (K) FAN COIL MOUNTED OVER 1" S.L. RETURN AIR PLENUM.

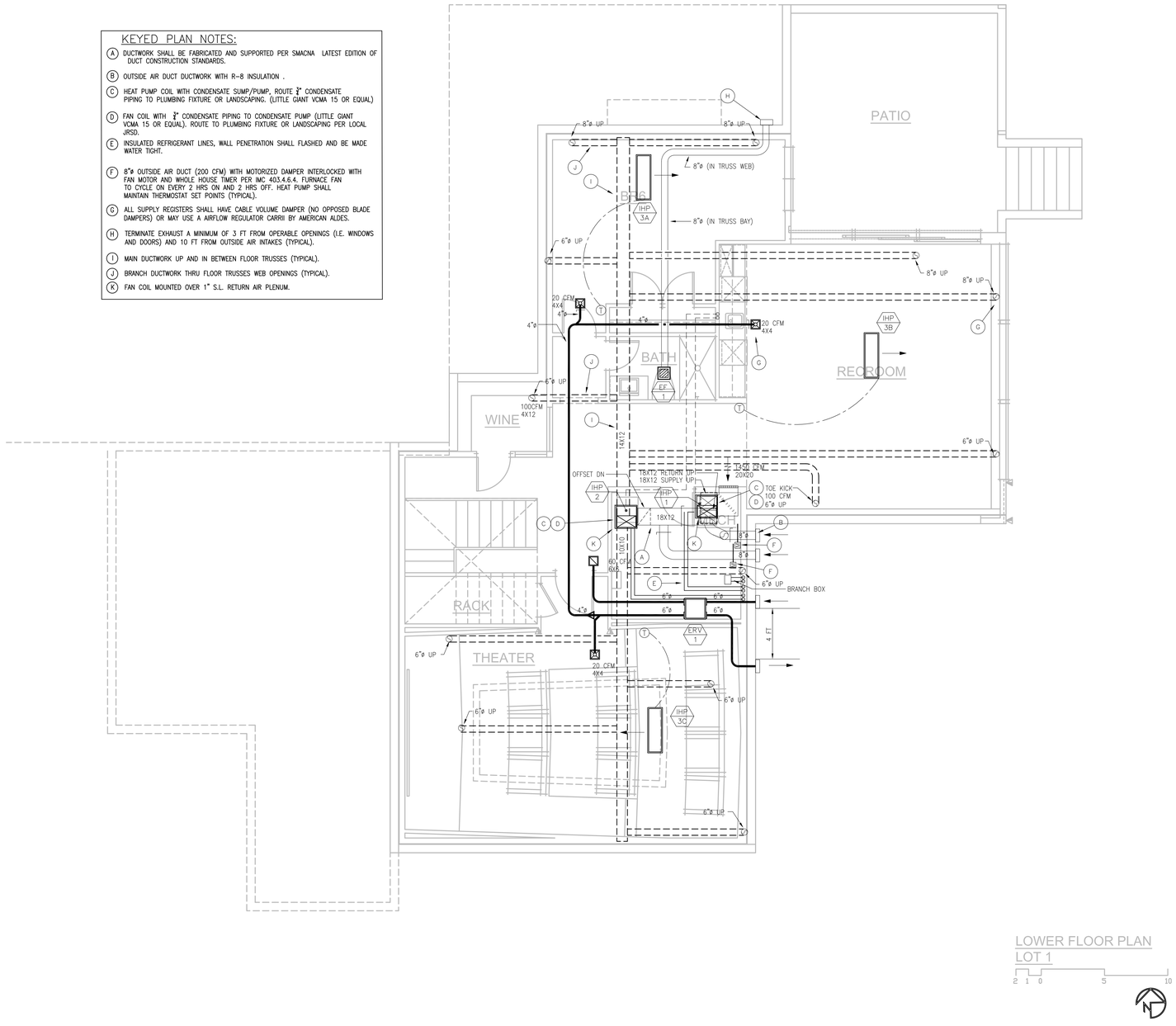

LOWER FLOOR PLAN
LOT 1

2 1 0 5 10

LOWER FLOOR PLAN-HVAC

SCALE: 1/4" = 1'-0"

NORTH

ABOSSEIN ENGINEERING L.L.C

MECHANICAL- ELECTRICAL
CIVIL - LEED - STRUCTURAL
FIRE PROTECTION

18465 NE 68th St.
REDMOND, WA 98052

OFFICE: (425) 462-9441
FAX: (425) 462-9451

EMAIL:
CService@abossein.com

WEBSITE:
www.abossein.com

ALEXANDER ABOSSEIN
STATE OF WASHINGTON
REGISTERED
PROFESSIONAL ENGINEER

WESCOTT RESIDENCE

481 OLD VINE LANE
CHELAN, WASHINGTON

SHEET TITLE:
BASEMENT FLOOR PLAN
HVAC

Revisions:	Date:
XX/XX/21 PERMIT SET	

Job No.: 221121
Date: 12/28/2021

M2.0

KEYED PLAN NOTES:

(A) DUCTWORK SHALL BE FABRICATED AND SUPPORTED PER SMACNA LATEST EDITION OF DUCT CONSTRUCTION STANDARDS.

(B) 6"ø RANGE VENT WITH WALL CAP. PAINT TO MATCH.

(C) INSULATED REFRIGERANT LINES, WALL PENETRATION SHALL FLASHED AND BE MADE WATER TIGHT.

(D) ALL SUPPLY REGISTERS SHALL HAVE CABLE VOLUME DAMPER (NO OPPOSED BLADE DAMPERS) OR MAY USE A AIRFLOW REGULATOR CARRII BY AMERICAN ALDES.

(E) (3)6"ø EXHAUST UP TO ROOF WITH COMMON ROOF CAP.

(F) MAIN DUCTWORK UP AND IN BETWEEN FLOOR TRUSSES (TYPICAL).

(G) OUTDOOR UNITS ANCHORED TO 4" CONCRETE HOUSEKEEPING PAD. TAG EACH UNIT. PAD BY G.C. (TYPICAL).

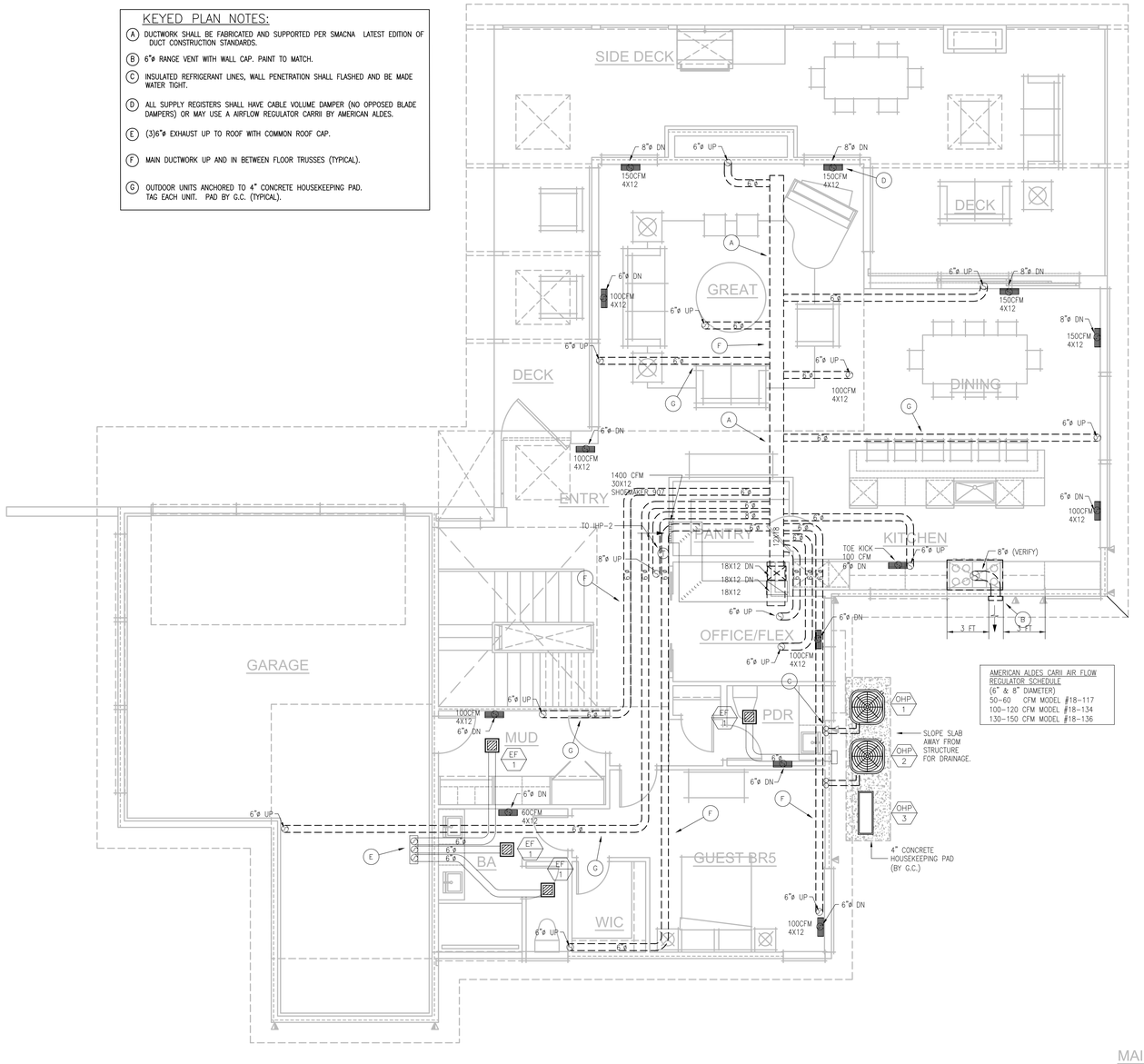

AMERICAN ALDES CARII AIR FLOW REGULATOR SCHEDULE
(6" & 8" DIAMETER)
50-60 CFM MODEL #18-117
100-120 CFM MODEL #18-134
130-150 CFM MODEL #18-136

MAIN FLOOR PLAN
2 1 0 5 10

MAIN FLOOR PLAN-HVAC
SCALE: 1/4" = 1'-0"

NORTH

ABOSSEIN ENGINEERING L.L.C

MECHANICAL- ELECTRICAL
CIVIL - LEED - STRUCTURAL
FIRE PROTECTION

18465 NE 68th St.
REDMOND, WA 98052

OFFICE: (425) 462-9441
FAX: (425) 462-9451

EMAIL:
CService@abossein.com

WEBSITE:
www.abossein.com

ALEXANDER ABOSSEIN
STATE OF WASHINGTON
REGISTERED
PROFESSIONAL ENGINEER

LOT 1
7216 93RD AVE SE
MERCER ISLAND, WASHINGTON

SHEET TITLE:
MAIN FLOOR PLAN - HVAC

Revisions:	Date:
XX/XX/22 PERMIT SET	

Job No.: 222019
Date: 03/17/2022

M3.0

KEYED PLAN NOTES:

(A) DUCTWORK SHALL BE FABRICATED AND SUPPORTED PER SMACNA LATEST EDITION OF DUCT CONSTRUCTION STANDARDS.

(B) (2)6"ø EXHAUST VENT UP TO ROOF WITH COMMON CAP.

(C) ALL SUPPLY REGISTERS SHALL HAVE CABLE VOLUME DAMPER (NO OPPOSED BLADE DAMPERS) OR MAY USE A AIRFLOW REGULATOR CARRII BY AMERICAN ALDES.

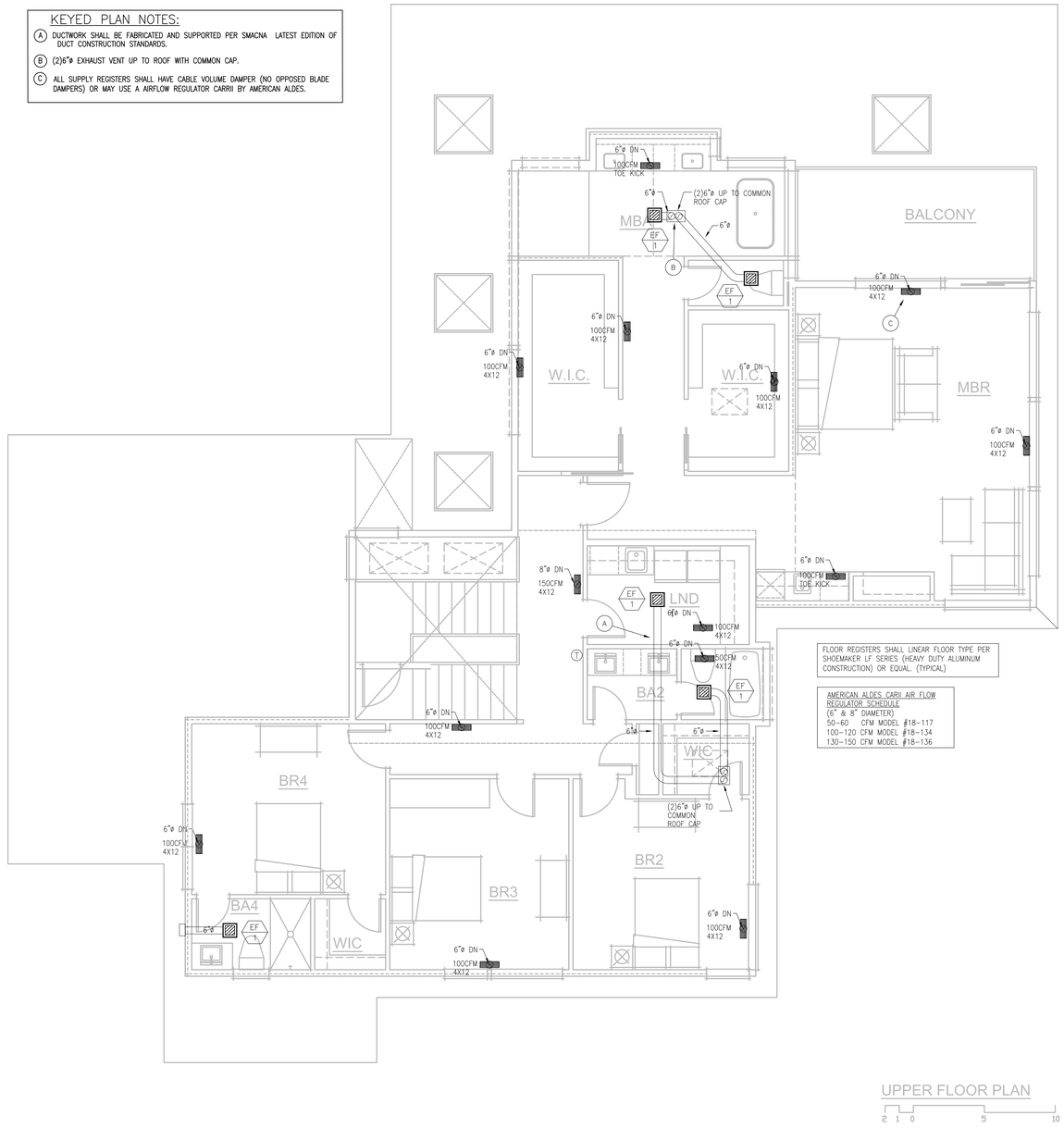

FLOOR REGISTERS SHALL LINEAR FLOOR TYPE PER SHOEMAKER LF SERIES (HEAVY DUTY ALUMINUM CONSTRUCTION) OR EQUAL. (TYPICAL)

AMERICAN ALDES CARII AIR FLOW REGULATOR SCHEDULE
(6" & 8" DIAMETER)
50–60 CFM MODEL #18–117
100–120 CFM MODEL #18–134
130–150 CFM MODEL #18–136

UPPER FLOOR PLAN–HVAC

SCALE: 1/4" = 1'-0"

NORTH

ABOSSEIN ENGINEERING L.L.C

MECHANICAL– ELECTRICAL
CIVIL – LEED – STRUCTURAL
FIRE PROTECTION

18465 NE 68th St.
REDMOND, WA 98052

OFFICE: (425) 462–9441
FAX: (425) 462–9451

EMAIL:
CService@abossein.com

WEBSITE:
www.abossein.com

ALEXANDER ABOSSEIN
STATE OF WASHINGTON
REGISTERED
PROFESSIONAL ENGINEER

LOT 1

7216 93RD AVE SE
MERCER ISLAND, WASHINGTON

SHEET TITLE:
UPPER FLOOR PLAN – HVAC

Revisions:	Date:
XX/XX/22 PERMIT SET	

Job No.: 222019
Date: 03/17/2022

M4.0